YAMAHA

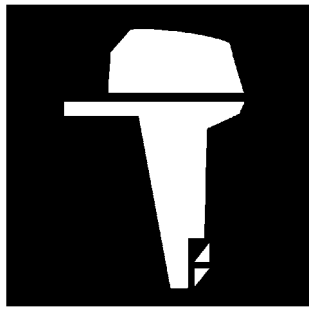

PARTS CATALOGUE
CATALOGUE DE PIECES DETACHEES

F30A'09 (69H9)
F40B'09 (67C8)

1H69H-300F1

( )

YAMAHA
GENUINE
Parts & Accessories

F30A/F40B
PARTS CATALOGUE
©2008 by Yamaha Motor Co., Ltd.
1st edition, June 2008
All rights reserved.
Any reprinting or unauthorized use
without the written permission of
Yamaha Motor Co., Ltd.
is expressly prohibited.
Printed in Japan.

F30A/F40B
CATALOGUE DE PIECES DETACHEES
©2008 par Yamaha Motor Co., Ltd.
1re édition, juin 2008
Tous droits réservés
Toute réimpression ou utilisation
non autorisée sans la permission écrite
de la Yamaha Motor Co., Ltd.
est formellement interdite.
Imprimé au Japon

FOREWORD

This Parts Catalogue is related to the parts for the model(s) on the cover page. When you are ordering replacement parts, please refer to this Parts Catalogue and quote both part numbers and part names correctly.

1. Modifications or additions which have been made after the issue of the Parts Catalogue will be announced in the Parts News.
   It is advisable that you make the necessary corrections to the Parts Catalogue according to the Parts News.

2. Abbreviations
   The following abbreviations are used in this Parts Catalogue.

   "UR" Use specified parts number.
   "UN" Use as many as needed.
   "AP" Alternate Parts
   "LM" Locally Made (Parts need to be ordered locally)
   "F#" Frame No. (Applicable machine No.)
   "O/S" Over Size

3. The number of components for assembly
   - Parts, which are to be supplied in an assembly, are listed with a dot (.) in front of the part name as shown below.
   - The numeral appearing to the right of each component part indicates the quantity of parts for each assembly unit.

PART NO.	DESCRIPTION	Q'TY	REMARKS
2F5–83310–60	FRONT FLASHER LIGHT ASSY	2	
115–83311–60	.BULB (6V–18W)	1	

4. Applicable colours of graphics are represented in the "REMARKS" as shown below.

PART NO.	DESCRIPTION	Q'TY	REMARKS
2N4–24110–00–X5	FUEL TANK COMP.	2	MXR
3J1–24240–10	.GRAPHIC, FUEL TANK	1	FOR MXR

5. Note that the illustrations for reference in finding parts numbers are not to be used for assembling. When assembling, please use the applicable service manual.

6. The asterisk (*) before a reference number indicates modified items after the first edition.

7. Applicable Serial No.

   Engine Serial No.

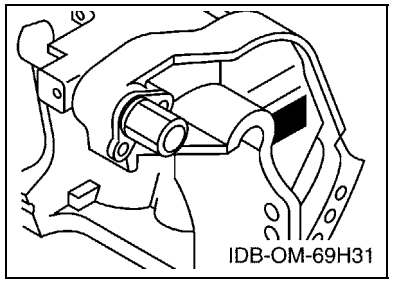

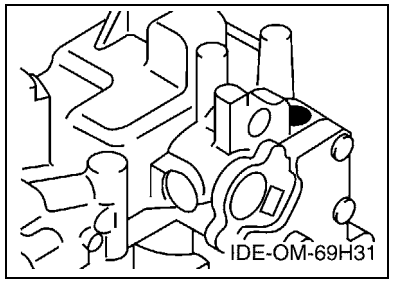

8. Applicable Engine Starting Serial No.

Model	Serial No.	Model	Serial No.
F30A	69H-1010597	F40B	67C-1043485

9. Applicable Colour Code

Abbreviation	Colour Name	Colour Code
DBNM2	DARK BLUISH GRAY METALLIC 2	004D

10. Quantity Column Information

Column No.	Name Of Q'ty Column	Applicable Model
1	MHD	F30AMHD,F40BMHD
2	ED	F40BED
3	ET	F30AET,F40BET

AVANT–PROPOS

Ce catalogue de pièces détachées concerne les pièces pour le(s) modèle(s) indiqué(s) sur la page de couverture. Lorsque vous commandez des pièces de rechange, veuillez vous référer à ce catalogue de pieces détachées et indiquer clairement les numéros et les noms des pièces détachées.

1. Les modifications ou ajouts ayant été effectués après la parution du catalogue de pièces détachées seront décrits dans les Bulletins d'information concernant les pièces détachées.
   Il est recommandé que vous apportiez les corrections nécessaires au catalogue des pièces détachées en vous référant aux Bulletins d'information.

2. Abréviations
   Dans ce catalogue, les abréviations suivantes sont utilisées:

   "UR" Utiliser le numéro de pièces spécifié.
   "UN" Utiliser autant que nécessaire.
   "AP" Pièces de substitution
   "LM" Fabrication locale (les pièces doivent être commandées localement.)
   "F#" N° de cadre (applicable au N° de série)
   "O/S" Surdimensionné

3. Nombre de pièces d'un assemblage
   - Les pièces fournies comme composants d'un assemblage sont précédées d'un point (.) de la manière indiquée ci–dessous.
   - Le chiffre apparaissant à la droite de chaque composant indique la quantité de pièces pour chaque unité d'assemblage.

N° PIECES	DESCRIPTION	QTE	REMARQUES
2F5–83310–60	ENS. CLIGNOTANT AVANT	2	
115–83311–60	.AMPOULE (6V–18W)	1	

4. Les couleurs concernant les graphiques sont indiquées dans la colonne "REMARQUES", comme indiqué ci–dessous.

N° PIECES	DESCRIPTION	QTE	REMARQUES
2N4–24110–00–X5	RESERVOIR A ESSENCE.	2	MXR
3J1–24240–10	.GRAPHIQUE	1	POUR MXR

5. Veuillez noter que les illustrations sont indiquées à titre de référence pour trouver les numéros de pièces, non pour être utilisées lors de l'assemblage. Lors de l'assemblage, veuillez utiliser le manuel d'entretien adéquat.

6. L'astérisque (*) placé devant un numéro de référence indique des éléments qui ont été modifiés après la première édition.

7. N° de série applicable

   N° de Série du moteur

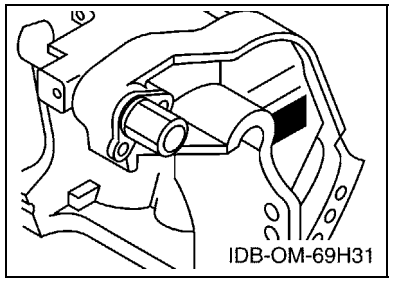

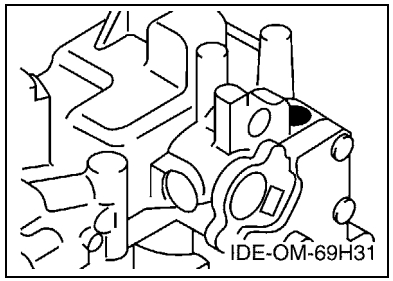

8. N° de série initial du moteur applicable

Modèle	N° de série	Modèle	N° de série
F30A	69H-1010597	F40B	67C-1043485

9. Code couleur applicable

Abréviation	Nom de la couleur	Code couleur
DBNM2	DARK BLUISH GRAY METALLIC 2	004D

10. Informations relatives à la colonne Quantité

N° de la colonne	Nom de la colonne Qté	Modèle applicable
1	MHD	F30AMHD,F40BMHD
2	ED	F40BED
3	ET	F30AET,F40BET

CONTENTS

TOP COWLING 1
CYLINDER & CRANKCASE 1 2
CRANKSHAFT & PISTON 3
CYLINDER & CRANKCASE 2 4
VALVE 6
INTAKE 7
CARBURETOR 9
OIL PUMP 12
FUEL 13
STARTER 15
GENERATOR 17
ELECTRICAL 1 18
ELECTRICAL 2 19
ELECTRICAL 3 21
STARTING MOTOR 22
BOTTOM COWLING 23
STEERING 1 26
STEERING 2 29
CONTROL 30
BRACKET 1 32
BRACKET 2 34
BRACKET 3 36
POWER TRIM & TILT ASSY 38
UPPER CASING 41
OIL PAN 43
LOWER CASING & DRIVE 1 44
LOWER CASING & DRIVE 2 47
FUEL TANK 49
STEERING GUIDE 50
REMOTE CONTROL BOX 51
REMOTE CONTROL ASSY 52
METER 55
OPTIONAL PARTS 56
REPAIR KIT 1 58
REPAIR KIT 2 59
REPAIR KIT 3 60

INDEX

NUMERICAL INDEX 62

TABLE DES MATIERES

CAPOT SUPERIEUR 1
CYLINDRE & CARTER 1 2
VILEBREQUIN & PISTON 3
CYLINDRE & CARTER 2 4
SOUPAPE 6
ADMISSION 7
CARBURATEUR 9
POMPE A HUILE 12
CARBURANT 13
DEMARREUR 15
GENERATRICE 17
PARTIE ELECTRIQUE 1 18
PARTIE ELECTRIQUE 2 19
PARTIE ELECTRIQUE 3 21
DEMARREUR ELECTRIQUE 22
CAPOT INFERIEUR 23
DIRECTION 1 26
DIRECTION 2 29
COMMANDE 30
SUPPORT 1 32
SUPPORT 2 34
SUPPORT 3 36
PUISSANCE PARER ET INCLINER 38
FOURREAU 41
VENTILATEUR D'HUILE 43
BOITIER D'HELICE TRANSMISSION1 44
BOITIER D'HELICE TRANSMISSION2 47
RESERVOIR A CARBURANT 49
FIXATION DE DIRECTION 50
BOITIER DE COMMANDE A DISTANCE 51
BOITIER DE COMMANDE A DISTANCE 52
COMPTEUR 55
PIECES OPTIONNELLES 56
KITS DE REPARATION 1 58
KITS DE REPARATION 2 59
KITS DE PEPARATION 3 60

INDEX

INDEX NUMERIQUE 62

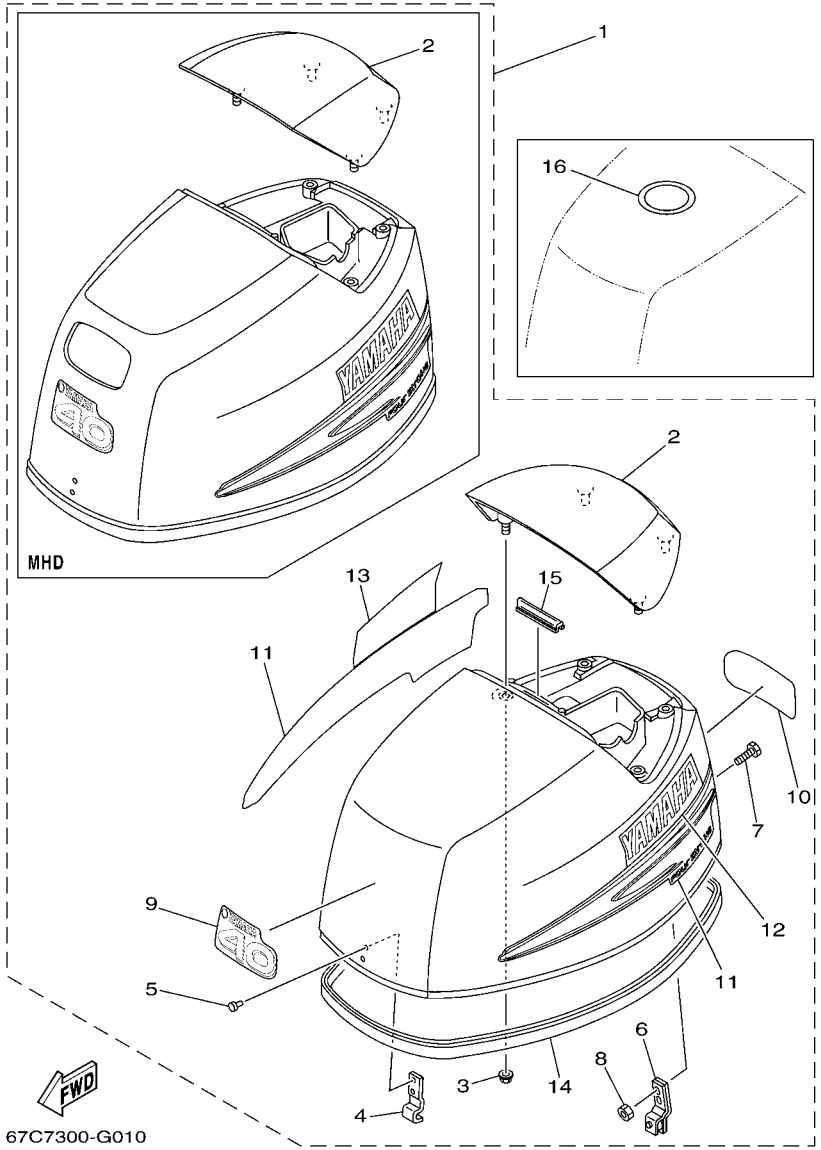

FIG. 1 TOP COWLING — CAPOT SUPERIEUR

REF. NO.	PART NO. N° PIECES	DESCRIPTION DESCRIPTION	MHD	ED	ET			REMARKS REMARQUES
1	67C–42610–20–4D	TOP COWLING ASSY CAPOT (ENS.)		1	1			F40B F40B
	67C–42610–30–4D	TOP COWLING ASSY CAPOT (ENS.)	1					F40B F40B
	69H–42610–20–4D	TOP COWLING ASSY CAPOT (ENS.)			1			F30A F30A
	69H–42610–30–4D	TOP COWLING ASSY CAPOT (ENS.)	1					F30A F30A
2	67C–42613–00–4D	.MOLDING, AIR DUCT .MANCHON A AIR		1	1			
	67C–42613–10–4D	.MOLDING, AIR DUCT .MANCHON A AIR	1					
3	90179–06M24	.NUT .ECROU	4	4	4			
4	62Y–42651–00	.HOOK .CROCHET	1	1	1			
5	90266–06M02	.RIVET .RIVET	2	2	2			
6	67C–42652–02	.HOOK .CROCHET	1	1	1			
7	90109–06MA4	.BOLT .BOULON	2	2	2			
8	95380–06700	.NUT .ECROU	2	2	2			
9	67C–42677–00	.GRAPHIC, FRONT .ADHESIF, AVANT	1	1	1			F40B F40B
	69H–42677–10	.GRAPHIC, FRONT .ADHESIF, AVANT	1		1			F30A F30A
10	67C–42678–00	.GRAPHIC, REAR .ADHESIF, ARRIERE	1	1	1			F40B F40B
	69H–42678–10	.GRAPHIC, REAR .ADHESIF, ARRIERE	1		1			F30A F30A
11	67C–W0070–10	.GRAPHIC SET .JEU DIEMBLEMES	1	1	1			
12	67C–42681–10	.MARK, COWLING .ADHESIF, CAPOT	1	1	1			
13	67C–42682–10	.MARK, COWLING .ADHESIF, CAPOT	1	1	1			
14	67C–42615–00	.SEAL .JOINT	1	1	1			
15	61N–42628–00	.SEAL .JOINT	1	1	1			
16	67F–13434–10	LABEL, CAUTION ETIQUETTE, ATTENTION	1	1	1			

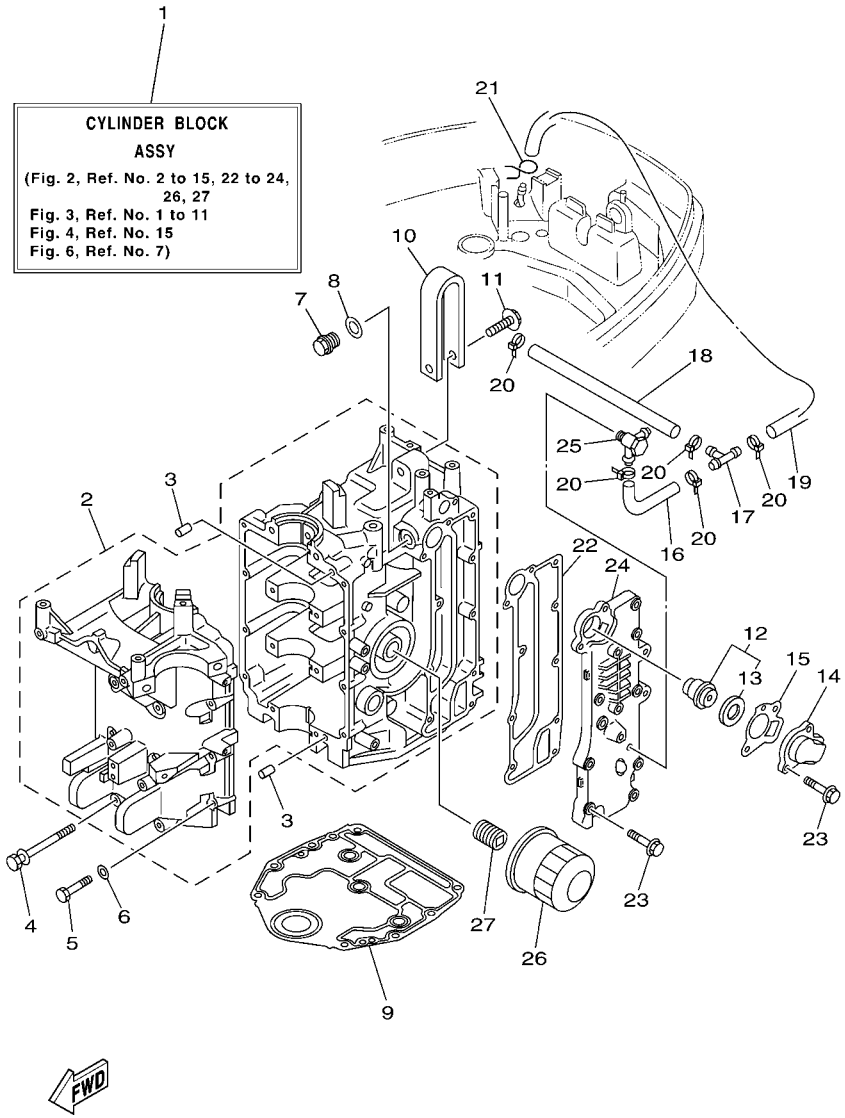

67C7300-G020

FIG. 2 CYLINDER & CRANKCASE 1 CYLINDRE & CARTER 1

REF. NO.	PART NO. N° PIECES	DESCRIPTION DESCRIPTION	MHD	ED	ET			REMARKS REMARQUES
1	67C–W009B–02–1S	CYLINDER BLOCK ASSY CYLINDRE GROUPE (ENS.)	1	1	1			
2	67C–15100–01–1S	CRANKCASE ASSY CARTER DE MOTEUR COMPLET	1	1	1			
3	99530–08012	PIN, DOWEL GOUJON, D'ASSEMBLAGE	2	2	2			
4	90119–08M01	BOLT, WITH WASHER BOULON, AVEC RONDELLE	8	8	8			
5	97013–06035	BOLT BOULON	8	8	8			
6	92903–06600	WASHER, PLATE RONDELLE, PLATE	8	8	8			
7	90340–14M06	PLUG, STRAIGHT SCREW PLOT, FILETE DROIT	1	1	1			
8	90430–14115	GASKET JOINT	1	1	1			
9	67C–11351–01	GASKET, CYLINDER JOINT, D'EMBASE	1	1	1			
10	65W–11119–00	HANGER, ENGINE ANNEAU, LEVAGE	1	1	1			
11	90105–08M87	BOLT, FLANGE BOULON	1	1	1			
12	6G8–12411–03	THERMOSTAT THERMOSTAT	1	1	1			
13	688–12412–00	.SEAL, THERMOSTAT .JOINT, THERMOSTAT	1	1	1			
14	6H3–12413–00–1S	COVER, THERMOSTAT COUVERCLE, THERMOSTAT	1	1	1			
15	62Y–12414–00	GASKET, COVER JOINT, COUVERCLE	1	1	1			
16	90445–09068	HOSE (L110) DURITE (L110)	1	1	1			
17	688–24378–00	PIPE, JOINT 3 DURITE RACCORDEMENT 3	1	1	1			
18	90445–09095	HOSE (L215) DURITE (L215)	1	1	1			
19	90445–09104	HOSE (L300) DURITE (L300)	1	1	1			
20	90465–11M10	CLAMP BRIDE	5	5	5			
21	90467–08004	CLIP JONC	1	1	1			
22	67C–41114–10	GASKET, EXHAUST OUTER COVER JOINT, COUVERCLE D'ECHAPPEMENT	1	1	1			
23	90119–06MA5	BOLT, WITH WASHER BOULON, AVEC RONDELLE	10	10	10			
24	67C–41113–01–1S	OUTER COVER, EXHAUST COUVERCLE, ECHAPPEMENT	1	1	1			
25	62Y–11372–01	NIPPLE, HOSE RACCORD, TUYAU	1	1	1			FLUSHING KIT FLUSHING KIT
26	5GH–13440–00	ELEMENT ASSY, OIL CLEANER ELEMENT, FILTRE A HUILE	1	1	1			
27	90401–20M00	BOLT, UNION BOULON, RACCORD	1	1	1			

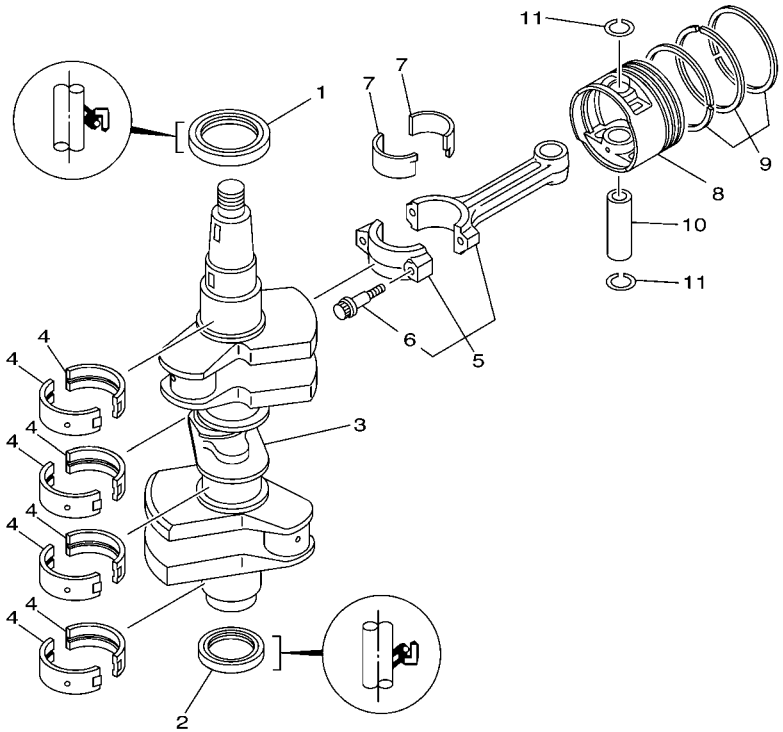

67C0010-0031

FIG. 3 CRANKSHAFT & PISTON VILEBREQUIN & PISTON

REF. NO.	PART NO. N° PIECES	DESCRIPTION DESCRIPTION	MHD	ED	ET			REMARKS REMARQUES
1	93102–43M42	OIL SEAL JOINT SPY	1	1	1			
2	93102–35M47	OIL SEAL JOINT SPY	1	1	1			
3	67C–11411–00	CRANKSHAFT VILEBREQUIN COMPLET	1	1	1			
4	62Y–11416–00	PLANE BEARING, CRANKSHAFT 1 COUSSINET DE VILEBREQUIN 1	8	8	8			UR BROWN UR BROWN
	62Y–11416–10	PLANE BEARING, CRANKSHAFT 1 COUSSINET DE VILEBREQUIN 1	8	8	8			UR BLACK UR BLACK
	62Y–11416–20	PLANE BEARING, CRANKSHAFT 1 COUSSINET DE VILEBREQUIN 1	8	8	8			UR BLUE UR BLUE
5	62Y–11650–10	CONNECTING ROD ASSY BIELLE COMPLETTE	3	3	3			
6	62Y–11654–00	.BOLT, CONNECTING ROD .BOULON, BIELLE	2	2	2			
7	62Y–11656–00	PLANE BEARING, CONNECTING ROD ROULEMENT DE BIELLE	6	6	6			UR BROWN UR BROWN
	62Y–11656–10	PLANE BEARING, CONNECTING ROD ROULEMENT DE BIELLE	6	6	6			UR BLACK UR BLACK
	62Y–11656–20	PLANE BEARING, CONNECTING ROD ROULEMENT DE BIELLE	6	6	6			UR BLUE UR BLUE
8	65W–11631–00–96	PISTON (STD) PISTON (STD)	3	3	3			
	65W–11635–00	PISTON (0.25MM O/S) PISTON (0.25MM O/S)	3	3	3			AP AP
	65W–11636–00	PISTON (0.50MM O/S) PISTON (0.50MM O/S)	3	3	3			AP AP
9	67C–11603–00	PISTON RING SET (STD) JEU DE SEGMENTS (STD)	3	3	3			
	67C–11604–00	PISTON RING SET (0.25MM O/S) JEU DE SEGMENTS (0.25MM O/S)	3	3	3			AP AP
	67C–11605–00	PISTON RING SET (0.50MM O/S) JEU DE SEGMENTS (0.50MM O/S)	3	3	3			AP AP
10	62Y–11633–00	PIN, PISTON AXE, PISTON	3	3	3			
11	93450–17129	CIRCLIP CIRCLIP, TYPE S	6	6	6			

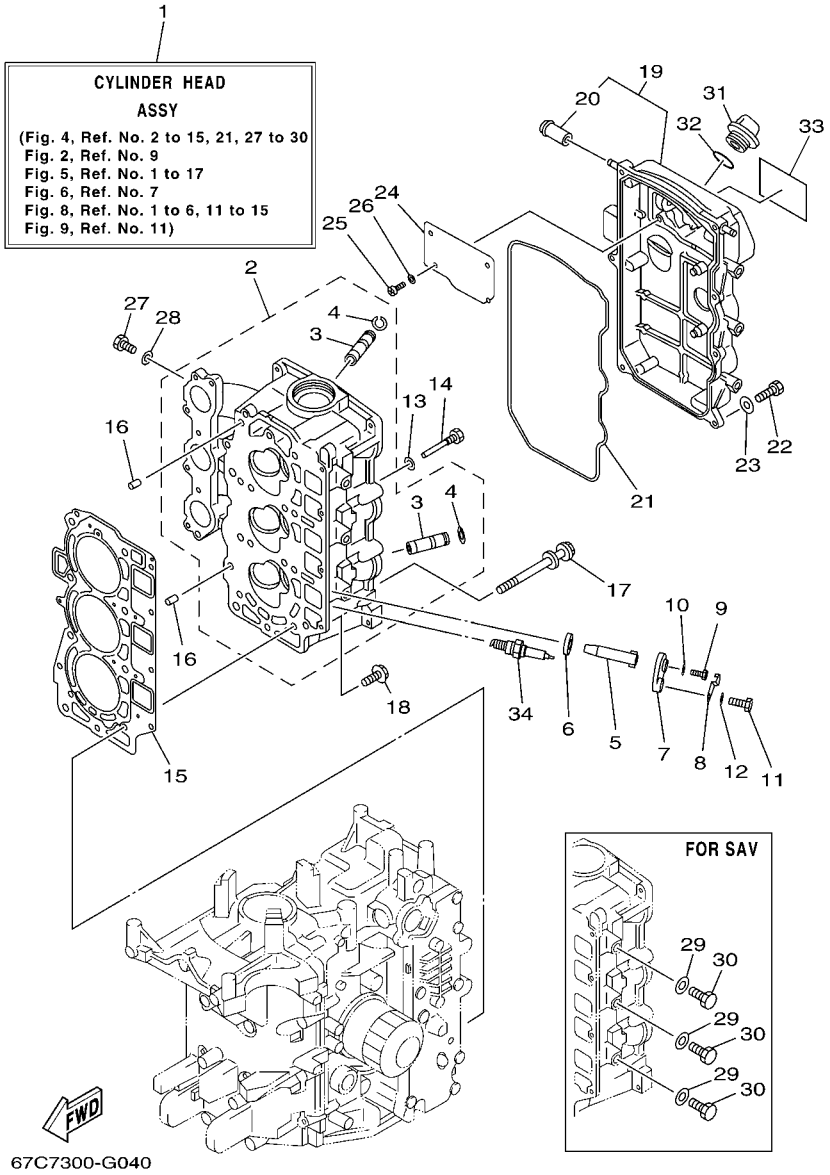

FIG. 4 CYLINDER & CRANKCASE 2 CYLINDRE & CARTER 2

REF. NO.	PART NO. N° PIECES	DESCRIPTION DESCRIPTION	MHD	ED	ET			REMARKS REMARQUES
1	67C–W009A–13–1S	CYLINDER HEAD ASSY CULASSE (ENS.)	1	1	1			
2	67C–11111–20–1S	HEAD, CYLINDER 1 CULASSE	1	1	1			FOR STD FOR STD
	67C–11111–30–1S	HEAD, CYLINDER 1 CULASSE	1	1	1			FOR SAV FOR SAV
3	62Y–11133–30	.GUIDE, VALVE 1 .GUIDE, SOUPAPE 1	6	6	6			
4	93450–09M01	.CIRCLIP .CIRCLIP, TYPE S	6	6	6			
5	62Y–11325–00	ANODE ANODE	3	3	3			
6	66M–11328–00	GROMMET, ANODE PASSE-FIL	3	3	3			
7	66M–11327–00–94	COVER, ANODE COUVERCLE ANODE	3	3	3			
8	66M–12535–00	PLATE PLAQUE	3	3	3			
9	97095–05012	BOLT BOULON	3	3	3			
10	92995–05600	WASHER RONDELLE	3	3	3			
11	97095–06020	BOLT BOULON	3	3	3			
12	92995–06600	WASHER RONDELLE	3	3	3			
13	90430–06014	GASKET JOINT	1	1	1			
14	90109–06M65	BOLT BOULON	1	1	1			
15	67C–11181–01	GASKET, CYLINDER HEAD 1 JOINT, DE CULASSE 1	1	1	1			
16	99530–08012	PIN, DOWEL GOUJON, D'ASSEMBLAGE	2	2	2			
17	90119–09M00	BOLT, WITH WASHER BOULON, AVEC RONDELLE	8	8	8			
18	90119–06MA3	BOLT, WITH WASHER BOULON, AVEC RONDELLE	4	4	4			
19	67C–11191–00–1S	COVER, CYLINDER HEAD 1 COUVERCLE, CULASSE 1	1	1	1			
20	62Y–14485–00	.PIPE, JOINT .DURITE	1	1	1			
21	67C–11356–00	SEAL, CYLINDER 2 JOINT, SPY CYLINDRE	1	1	1			
22	97095–06020	BOLT BOULON	7	7	7			
23	92995–06600	WASHER RONDELLE	7	7	7			
24	67C–11168–00	COVER, BREATHER COUVERCLE, RENIFLARD	1	1	1			
25	98507–04010	SCREW, PAN HEAD VIS, TETE TRONCONIQUE	4	4	4			
26	92907–04600	WASHER RONDELLE	4	4	4			

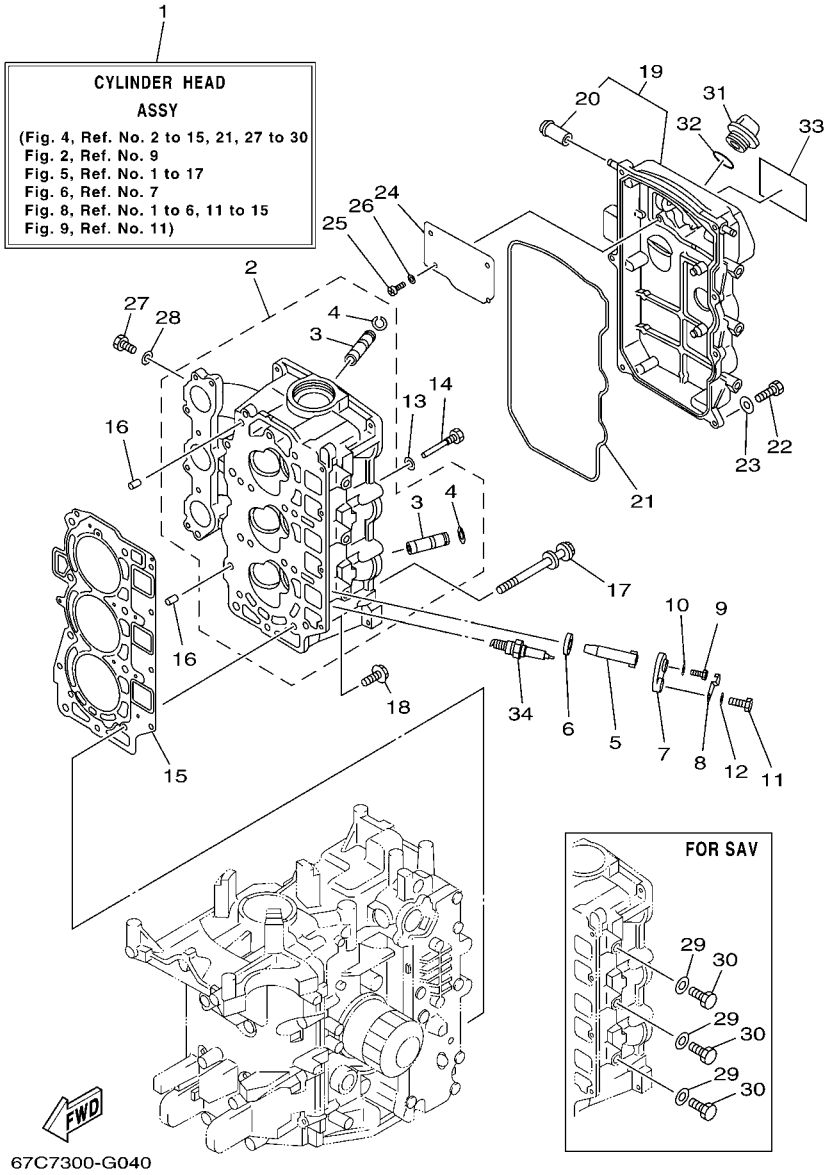

FIG. 4 CYLINDER & CRANKCASE 2 CYLINDRE & CARTER 2

REF. NO.	PART NO. N° PIECES	DESCRIPTION DESCRIPTION	MHD	ED	ET			REMARKS REMARQUES
27	97095–06010	BOLT BOULON	3	3	3			
28	90430–06014	GASKET JOINT	3	3	3			
29	90430–08143	GASKET JOINT	3	3	3			FOR SAV FOR SAV
30	97095–08014	BOLT BOULON	3	3	3			FOR SAV FOR SAV
31	6G8–15363–00	PLUG, OIL PLOT, HUILE	1	1	1			
32	93210–24M79	O-RING JOINT TORIQUE	1	1	1			
33	62Y–12138–60	MARK, CAUTION MAKER	1	1	1			
34	94701–00375	PLUG, SPARK (NGK DPR6EA-9) BOUGIE D'ALLUMAGE(NGK DPR6EA-9	3	3	3			

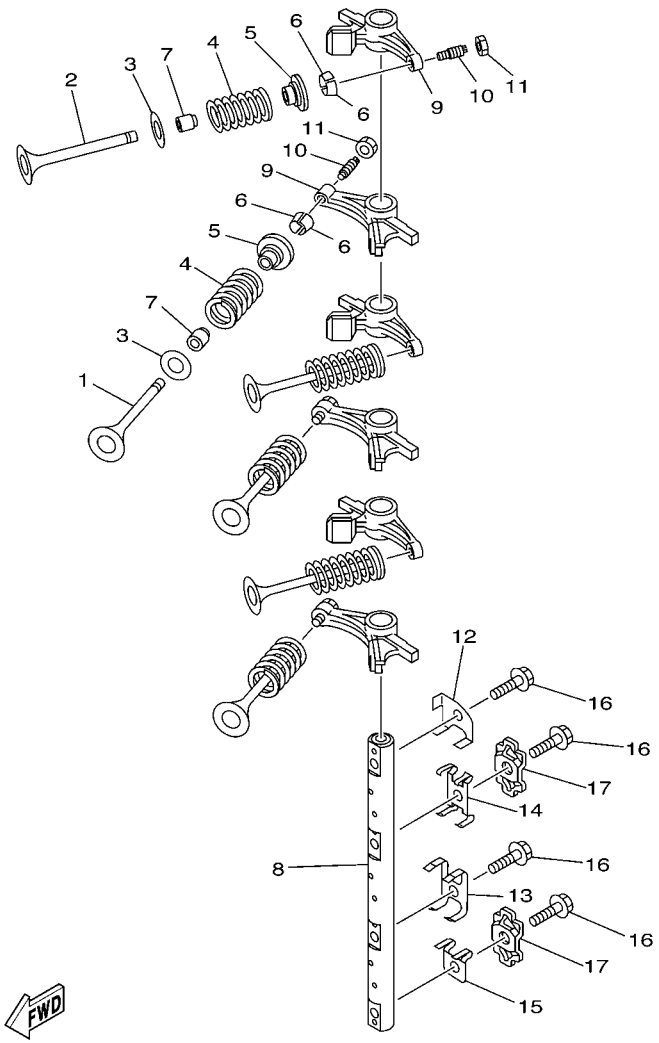

67C1010-2051

FIG. 5 VALVE SOUPAPE

REF. NO.	PART NO. N° PIECES	DESCRIPTION DESCRIPTION	MHD	ED	ET			REMARKS REMARQUES
1	67C–12111–00	VALVE, INTAKE SOUPAPE, ADMISSION	3	3	3			
2	62Y–12121–00	VALVE, EXHAUST SOUPAPE, ECHAPPEMENT	3	3	3			
3	62Y–12116–00	SEAT, VALVE SPRING SIEGE, RESSORT DE SOUPAPE	6	6	6			
4	51Y–12114–00	SPRING, VALVE OUTER RESSORT DE SOUPAPE, EXTERNE	6	6	6			
5	30X–12117–00	RETAINER, VALVE SPRING BUTEE DE RESSORT DE SOUPAPE	6	6	6			
6	30X–12118–00	COTTER, VALVE FRAISE, SOUPAPE	12	12	12			
7	51Y–12119–00	SEAL, VALVE STEM JOINT, QUEUE DE SOUPAPE	6	6	6			
8	67C–12146–00	SHAFT, ROCKER AXE, CULBUTEUR	1	1	1			
9	65W–12151–00	ARM, VALVE ROCKER CULBUTEUR	6	6	6			
10	62Y–12159–00	SCREW, VALVE ADJUSTING VIS, REGLAGE DE SOUPAPE	6	6	6			
11	62Y–12158–00	NUT, LOCK CONTRE-ECROU	6	6	6			
12	62Y–12238–00	PLATE, BOLT STOPPER PLAQUE, BUTEE DE BOULON		1	1			
	64J–12238–00	PLATE, BOLT STOPPER PLAQUE, BUTEE DE BOULON	1					
13	62Y–12279–00	PLATE PLAQUE		1	1			
	64J–12279–00	PLATE PLAQUE	1					
14	62Y–12216–00	SPRING RESSORT	1	1	1			
15	67C–12113–00	SPRING, VALVE INNER RESSORT DE SOUPAPE, INTERNE	1	1	1			
16	90109–08M63	BOLT BOULON	4	4	4			
17	62Y–12231–00	GUIDE, STOPPER 1 GUIDE, BUTEE 1	2	2	2			

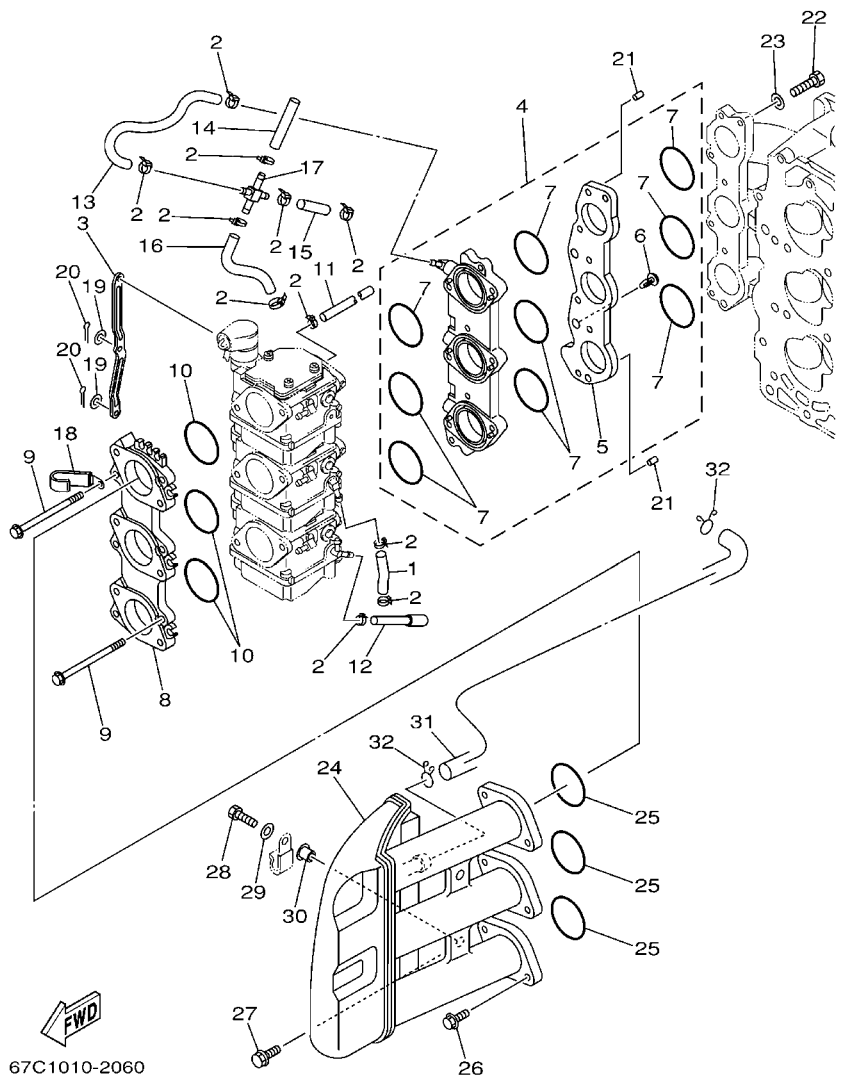

FIG. 6 INTAKE — ADMISSION

REF. NO.	PART NO. N° PIECES	DESCRIPTION DESCRIPTION	MHD	ED	ET			REMARKS REMARQUES
1	90445–09M34	HOSE DURITE	1	1	1			
2	90465–11M10	CLAMP BRIDE	11	11	11			
3	67C–14585–00	LINK, ACCEL. BIELLETTE, ACCELERATION	1	1	1			
4	67C–13589–00	CARBURETOR JOINT COMP. RACCORD, CARBURATEUR	1	1	1			
5	67C–14271–00	.INSULATOR .ISOLATEUR	1	1	1			
6	90338–04M17	.PLUG .PLOT	2	2	2			
7	67C–14561–00	.O-RING .JOINT TORIQUE	9	9	9			
8	67C–14243–01–94	PLATE PLAQUE	1	1	1			
9	97595–06590	BOLT, WITH WASHER VIS HEXAGONAL AVC RONDELLE	6	6	6			
10	67C–14562–00	O-RING JOINT TORIQUE	3	3	3			
11	67C–13971–00	PIPE, FUEL 1 TUBE 1, CARBURANT	1	1	1			
12	67C–13972–00	PIPE, FUEL 2 TUBE 2, CARBURANT	1	1	1			
13	67C–13973–00	PIPE, FUEL 3 TUBE 3, CARBURANT	1	1	1			
14	67C–13974–00	PIPE, FUEL 4 TUBE 4, CARBURANT	1	1	1			
15	67C–13975–00	PIPE, FUEL 5 TUBE 5, CARBURANT	1	1	1			
16	67C–13976–00	PIPE, FUEL 6 TUBE 6, CARBURANT	1	1	1			
17	67C–14318–00	PIPE, JOINT 4 DURITE RACCORDEMENT 4	1	1	1			
18	67C–14255–00	CLAMP BRIDE	1	1	1			
19	92990–04600	WASHER, PLATE RONDELLE, PLATE	2	2	2			
20	91490–06012	PIN. COTTER GOUPILLE	2	2	2			
21	93608–16M16	PIN, DOWEL AXE	2	2	2			
22	97095–06025	BOLT BOULON	6	6	6			
23	92995–06600	WASHER RONDELLE	6	6	6			
24	67C–14440–00	SILENCER ASSY, INTAKE SIENCIEUX D'ADMISSION	1	1	1			
25	93210–34MJ6	O-RING JOINT TORIQUE	3	3	3			
26	90119–06M82	BOLT, WITH WASHER BOULON, AVEC RONDELLE	5	5	5			
27	90119–06M86	BOLT, WITH WASHER BOULON, AVEC RONDELLE	1	1	1			

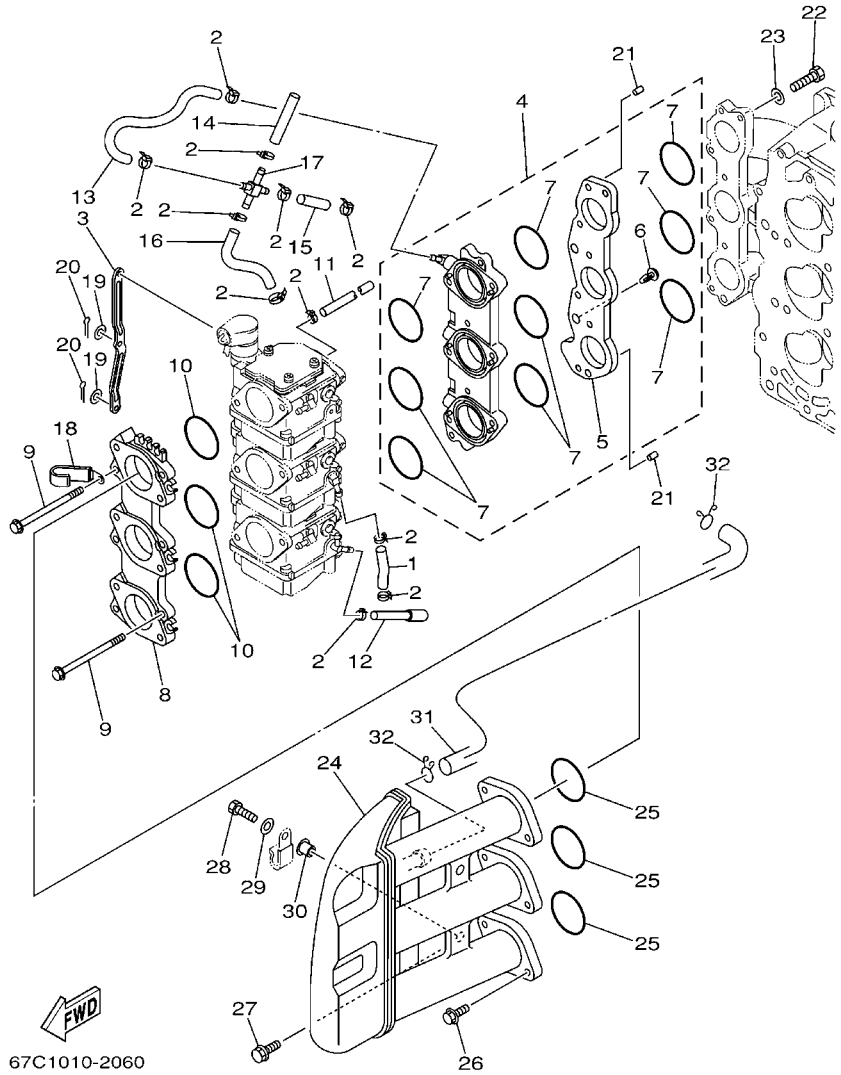

FIG. 6 INTAKE — ADMISSION

REF. NO.	PART NO. N° PIECES	DESCRIPTION DESCRIPTION	MHD	ED	ET			REMARKS REMARQUES
28	97095–06020	BOLT BOULON	2	2	2			
29	92995–06600	WASHER RONDELLE	2	2	2			
30	90387–06M70	COLLAR COLLERETTE	2	2	2			
31	67C–15373–00	PIPE, BREATHER DURITE DE RENIFLARD	1	1	1			
32	90467–15M14	CLIP JONC	2	2	2			

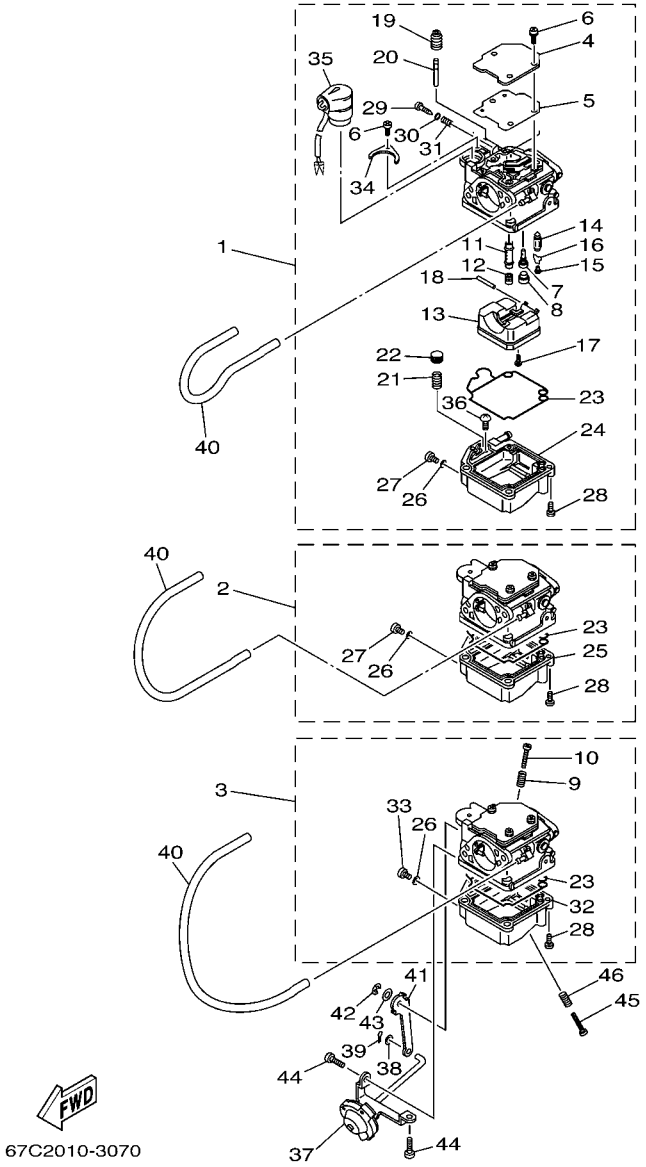

FIG. 7 CARBURETOR CARBURATEUR

REF. NO.	PART NO. N° PIECES	DESCRIPTION DESCRIPTION	MHD	ED	ET			REMARKS REMARQUES
1	67C–14901–03	CARBURETOR ASSY 1 CARBURATEUR 1 COMPLET	1	1	1			F40B-FOR STD F40B-FOR STD
	67C–14901–23	CARBURETOR ASSY 1 CARBURATEUR 1 COMPLET		1	1			F40B-FOR SAV F40B-FOR SAV
	69H–14901–02	CARBURETOR ASSY 1 CARBURATEUR 1 COMPLET			1			F30A-FOR STD F30A-FOR STD
	69H–14901–22	CARBURETOR ASSY 1 CARBURATEUR 1 COMPLET	1		1			F30A-FOR SAV F30A-FOR SAV
2	67C–14902–03	CARBURETOR ASSY 2 CARBURATEUR 2 COMPLET	1	1	1			F40B-FOR STD F40B-FOR STD
	67C–14902–23	CARBURETOR ASSY 2 CARBURATEUR 2 COMPLET		1	1			F40B-FOR SAV F40B-FOR SAV
	69H–14902–02	CARBURETOR ASSY 2 CARBURATEUR 2 COMPLET			1			F30A-FOR STD F30A-FOR STD
	69H–14902–22	CARBURETOR ASSY 2 CARBURATEUR 2 COMPLET	1		1			F30A-FOR SAV F30A-FOR SAV
3	67C–14903–03	CARBURETOR ASSY 3 CARBURATEUR 3 COMPLET	1	1	1			F40B-FOR STD F40B-FOR STD
	67C–14903–23	CARBURETOR ASSY 3 CARBURATEUR 3 COMPLET		1	1			F40B-FOR SAV F40B-FOR SAV
	69H–14903–02	CARBURETOR ASSY 3 CARBURATEUR 3 COMPLET			1			F30A-FOR STD F30A-FOR STD
	69H–14903–22	CARBURETOR ASSY 3 CARBURATEUR 3 COMPLET	1		1			F30A-FOR SAV F30A-FOR SAV
4	65W–14572–00	.PLATE .PLAQUE	3	3	3			
5	65W–14126–10	.GASKET .JOINT	3	3	3			
6	97803–04010	.SCREW, PAN HEAD .VIS, CRUCIFORME	13	13	13			
7	67C–14948–02	.JET (#38) .GICLEUR (#38)	3	3	3			F40B-FOR STD F40B-FOR STD
	67C–14948–00	.JET (#40) .GICLEUR (#40)	3	3	3			
8	679–14966–00	.RUBBER CAP .CAOUTCHOUC CASQUILLO	3	3	3			
9	90501–10326	.SPRING, COMPRESSION .RESSORT, COMPRESSION	1	1	1			#3 #3
10	63V–14523–00	.SCREW, STOP .VIS, BUTEE	1	1	1			#3 #3
11	67C–14948–01	.JET (#35) .GICLEUR (#35)	3	3	3			F40B-FOR STD F40B-FOR STD
	67C–14947–00	.JET, NEEDLE .GICLEUR DE STARTER		3	3			F40B-FOR SAV F40B-FOR SAV
	69H–14947–00	.JET, NEEDLE .GICLEUR DE STARTER	3		3			F30A F30A
12	67C–14943–25	.JET, MAIN (#95) .GICLEUR, PRINCIPAL (#95)	3	3	3			F40B F40B
	69H–14943–22	.JET, MAIN (#88) .GICLEUR, PRINCIPAL (#88)	3		3			F30A F30A
13	63V–14985–00	.FLOAT .FLOTTEUR	3	3	3			
14	6G1–14546–01	.VALVE, NEEDLE .POINTEAU	3	3	3			

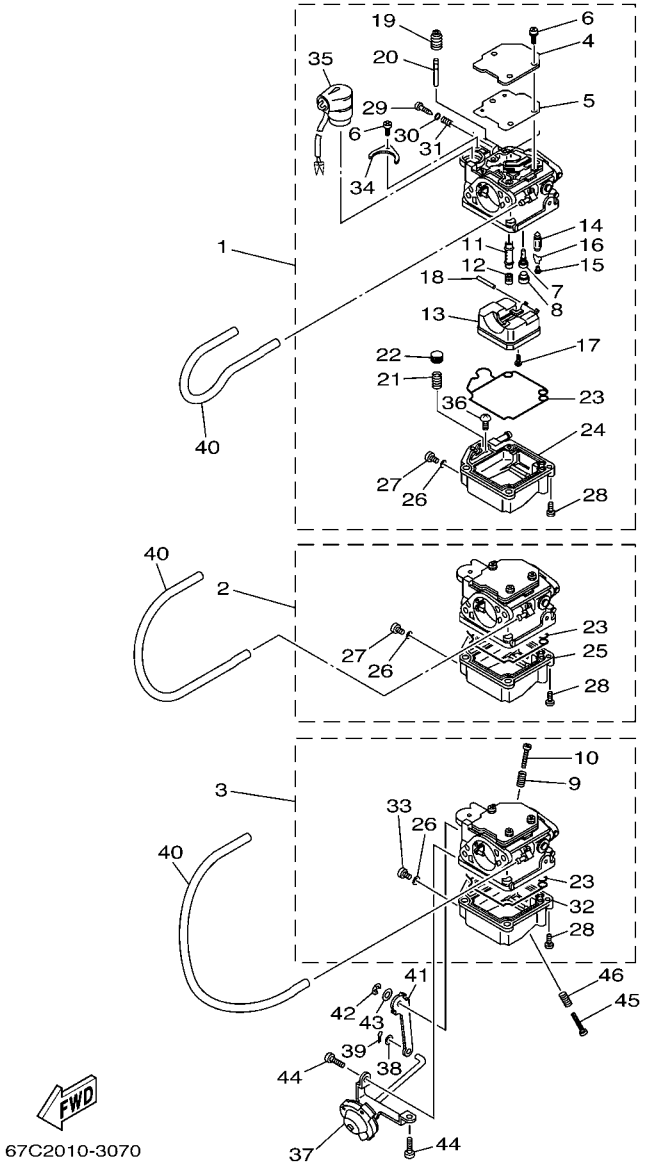

FIG. 7 CARBURETOR CARBURATEUR

REF. NO.	PART NO. N° PIECES	DESCRIPTION DESCRIPTION	MHD	ED	ET			REMARKS REMARQUES
15	676–14186–00	.PIN, FLOAT .AXE, FLOTTEUR	3	3	3			
16	663–14159–00	.CLIP .JONC	3	3	3			
17	98580–04008	.SCREW, PAN HEAD .VIS	3	3	3			
18	6H4–14548–00	.PIN, FLOAT ARM .AXE, BRAS DE FLOTTEUR	3	3	3			
19	65W–14373–01	.COVER, PLUNGER CAP .COUVERCLE DE PLONGEUR	3	3	3			
20	67C–14379–10	.ROD, STARTER .TRINGLE, STARTER	3	3	3			F40B-FOR STD F40B-FOR STD
	67C–14379–00	.ROD, STARTER .TRINGLE, STARTER	3	3	3			
21	65W–14335–00	.SPRING, PLUNGER .RESSORT, PLONGEUR	3	3	3			
22	67C–14371–00	.PLUNGER, STARTER .PLONGEUR, STARTER	3	3	3			
23	65W–14384–00	.GASKET, FLOAT CHAMBER .JOINT, CUVE DE FLOTTEUR	3	3	3			
24	67C–14980–00	.BODY, FLOAT CHAMBER .CORPS, CUVE DE FLOTTEUR	1	1	1			F40B-#1 F40B-#1
	69H–14980–00	.BODY, FLOAT CHAMBER .CORPS, CUVE DE FLOTTEUR	1		1			F30A-#1 F30A-#1
25	67C–14981–00	.BODY, FLOAT CHAMBER .CORPS, CUVE DE FLOTTEUR	1	1	1			F40B-#2 F40B-#2
	69H–14981–00	.BODY, FLOAT CHAMBER .CORPS, CUVE DE FLOTTEUR	1		1			F30A-#2 F30A-#2
26	65W–14398–00	.GASKET .JOINT	3	3	3			
27	65W–14992–00	.SCREW, DRAIN .BOUCHON, PURGE	2	2	2			#1,2 #1,2
28	97980–04114	.SCREW, WITH WASHER .VIS, AVEC RONDELLE	12	12	12			
29	67C–14923–00	.SCREW, PILOT .VIS, RALENTI	3	3	3			
	67C–14923–20	.SCREW, PILOT .VIS, RALENTI	3		3			F30A-FOR SAV F30A-FOR SAV
30	67C–14397–00	.O-RING .JOINT TORIQUE	3	3	3			
31	67C–14555–00	.SPRING .RESSORT	3	3	3			
32	67C–14982–00	.BODY, FLOAT CHAMBER .CORPS, CUVE DE FLOTTEUR	1	1	1			F40B-#3 F40B-#3
	69H–14982–00	.BODY, FLOAT CHAMBER .CORPS, CUVE DE FLOTTEUR	1		1			F30A-#3 F30A-#3
33	67C–14992–00	.SCREW, DRAIN .BOUCHON, PURGE	1	1	1			#3 #3
34	65W–14346–00	.PLATE .PLAQUE	1	1	1			
35	67C–14380–00	.PRIME STARTER ASSY .STARTER AUTOMATIQUE	1	1	1			
36	67C–14567–00	.SCREW .VIS	3	3	3			

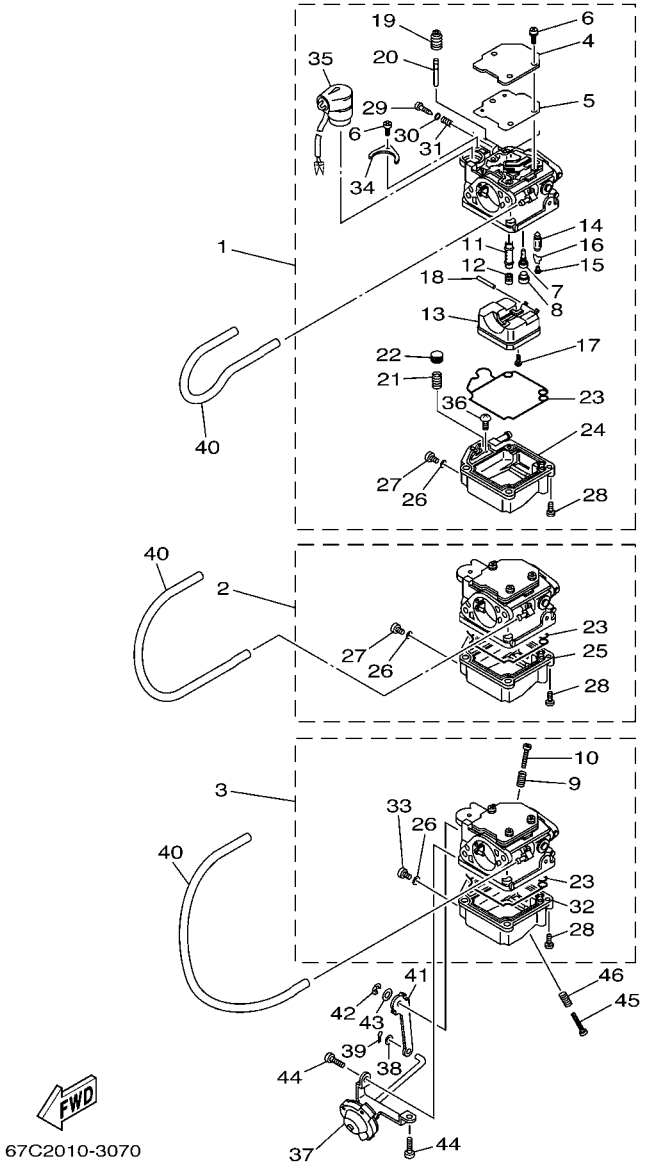

FIG. 7 CARBURETOR CARBURATEUR

REF. NO.	PART NO. N° PIECES	DESCRIPTION DESCRIPTION	MHD	ED	ET			REMARKS REMARQUES
37	67C–14369–00	DIAPHRAGM ASSY 2 DIAPHRAGME 2	1	1	1			
38	92990–04600	WASHER, PLATE RONDELLE, PLATE	1	1	1			
39	91490–06012	PIN. COTTER GOUPILLE	1	1	1			
40	67C–13974–00	PIPE, FUEL 4 TUBE 4, CARBURANT	3	3	3			
41	67C–14974–00	LEVER, CONNECT LEVIER, CONNECTEUR	1	1	1			
42	67C–14356–00	CLIP JONC	1	1	1			
43	67C–14398–00	WASHER RONDELLE	1	1	1			
44	67C–14325–00	SCREW, PAN HEAD VIS TETE CONIQUE	2	2	2			
45	67C–14245–00	SCREW, STOP VIS, BUTEE	1	1	1			
46	67C–14242–00	SPRING RESSORT	1	1	1			

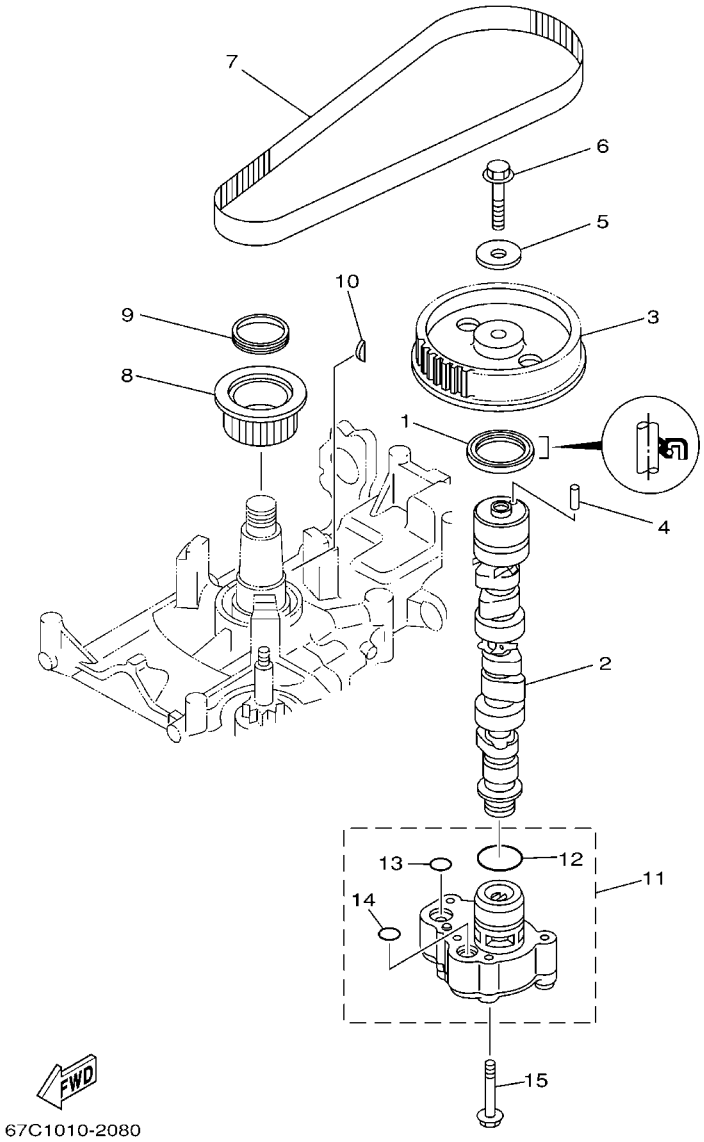

FIG. 8 OIL PUMP — POMPE A HUILE

REF. NO.	PART NO. N° PIECES	DESCRIPTION DESCRIPTION	MHD	ED	ET			REMARKS REMARQUES
1	93102–37M40	OIL SEAL JOINT SPY	1	1	1			
2	67C–12171–00	CAMSHAFT 1 ARBRE A CAMES 1		1	1			
	67C–12170–12	CAMSHAFT ASSY 1 ENS ARBRE A CAMES 1	1					
3	67C–11537–01	GEAR, DRIVEN PIGNON SECONDAIRE	1	1	1			
4	93605–14143	PIN, DOWEL AXE	1	1	1			
5	90201–10M06	WASHER, PLATE RONDELLE, PLATE	1	1	1			
6	95895–10040	BOLT, FLANGE BOULON	1	1	1			
7	65W–46241–00	V-BELT COURROIE TRAPEZOIDALE	1	1	1			
8	65W–11536–10	GEAR, DRIVE ENGRENAGE, MENANT	1	1	1			
9	65W–11476–00	SPRING RESSORT	1	1	1			
10	90280–04M06	KEY, WOODRUFF CLAVETTE, DEMI-LUNE	1	1	1			
11	69W–13300–00	OIL PUMP ASSY POMPE A HUILE COMPLETE	1	1	1			
12	93210–33MH2	.O-RING .JOINT TORIQUE	1	1	1			
13	93210–12MG9	.O-RING .JOINT TORIQUE	1	1	1			
14	93210–14515	.O-RING .JOINT TORIQUE	1	1	1			
15	90119–06025	BOLT, WITH WASHER BOULON, AVEC RONDELLE	4	4	4			

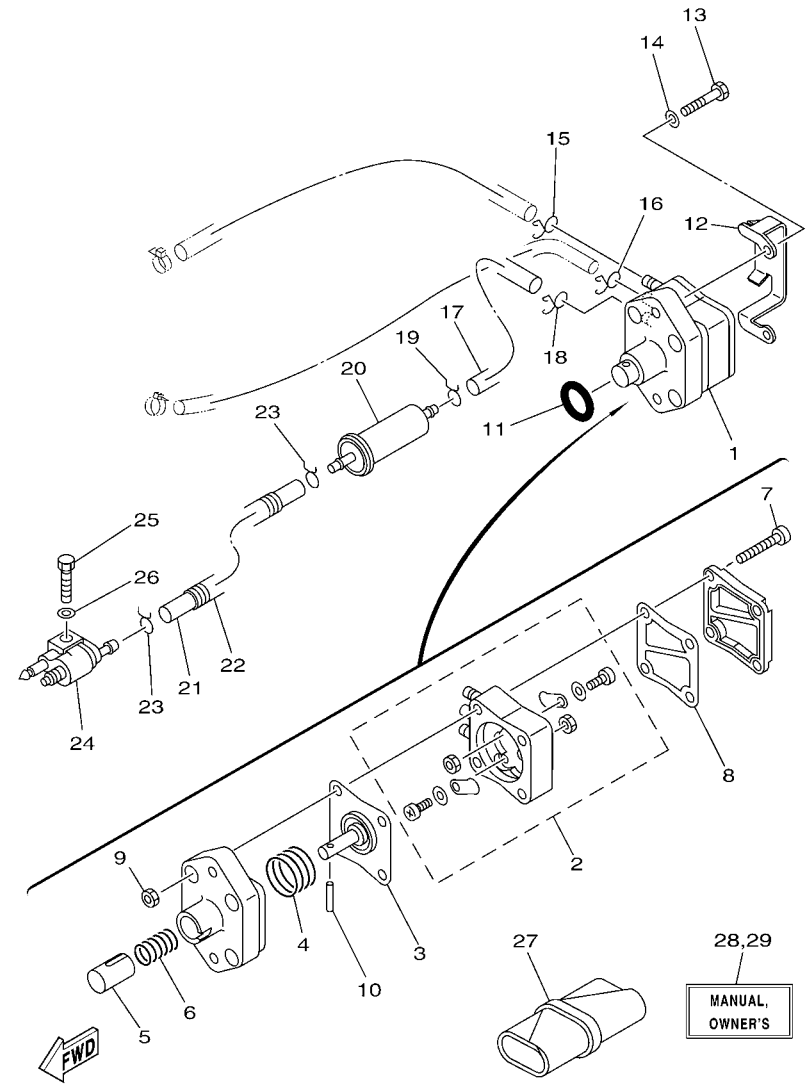

FIG. 9 FUEL CARBURANT

REF. NO.	PART NO. N° PIECES	DESCRIPTION DESCRIPTION	MHD	ED	ET			REMARKS REMARQUES
1	62Y–24410–04	FUEL PUMP ASSY POMPE A ESSENCE	1	1	1			
2	62Y–24415–01	.BODY 4 .CORPS 4	1	1	1			
3	62Y–24411–02	.DIAPHRAGM .DIAPHRAGME	1	1	1			
4	62Y–24423–00	.SPRING, DIAPHRAGM .RESSORT, DIAPHRAGME	1	1	1			
5	62Y–13131–01	.PLUNGER .PLONGEUR	1	1	1			
6	62Y–24454–00	.SPRING .RESSORT	1	1	1			
7	62Y–24444–01	.SCREW .VIS	4	4	4			
8	6C5–24471–00	.DIAPHRAGM .DIAPHRAGME	1	1	1			
9	95380–05600	.NUT .ECROU	4	4	4			
10	62Y–24374–01	.PIN .PIN	1	1	1			
11	93210–24M79	O-RING JOINT TORIQUE	1	1	1			
12	65W–24474–00	COVER COUVERCLE	1	1	1			
13	97095–06030	BOLT BOULON	2	2	2			
14	92995–06600	WASHER RONDELLE	2	2	2			
15	90467–10M04	CLIP JONC	1	1	1			
16	90467–09M17	CLIP JONC	1	1	1			
17	90445–10MG6	HOSE (L180) DURITE (L180)	1	1	1			
18	90467–10M04	CLIP JONC	1	1	1			
19	90467–09M03	CLIP JONC	1	1	1			
20	65W–24251–10	STRAINER 1 FILTRE 1	1	1	1			
21	90445–10MH8	HOSE (L430) DURITE (L430)	1	1	1			
22	90446–14M12	HOSE DURITE	1	1	1			
23	90467–09M03	CLIP JONC	2	2	2			
24	6G1–24304–02	FUEL PIPE JOINT COMP. 1 DURITE RACCORDEMT. A ESSENCE	1	1	1			
25	97095–06025	BOLT BOULON	1	1	1			
26	92995–06600	WASHER RONDELLE	1	1	1			
27	62Y–28100–00	TOOL KIT TROUSSE A OUTILS	1	1	1			

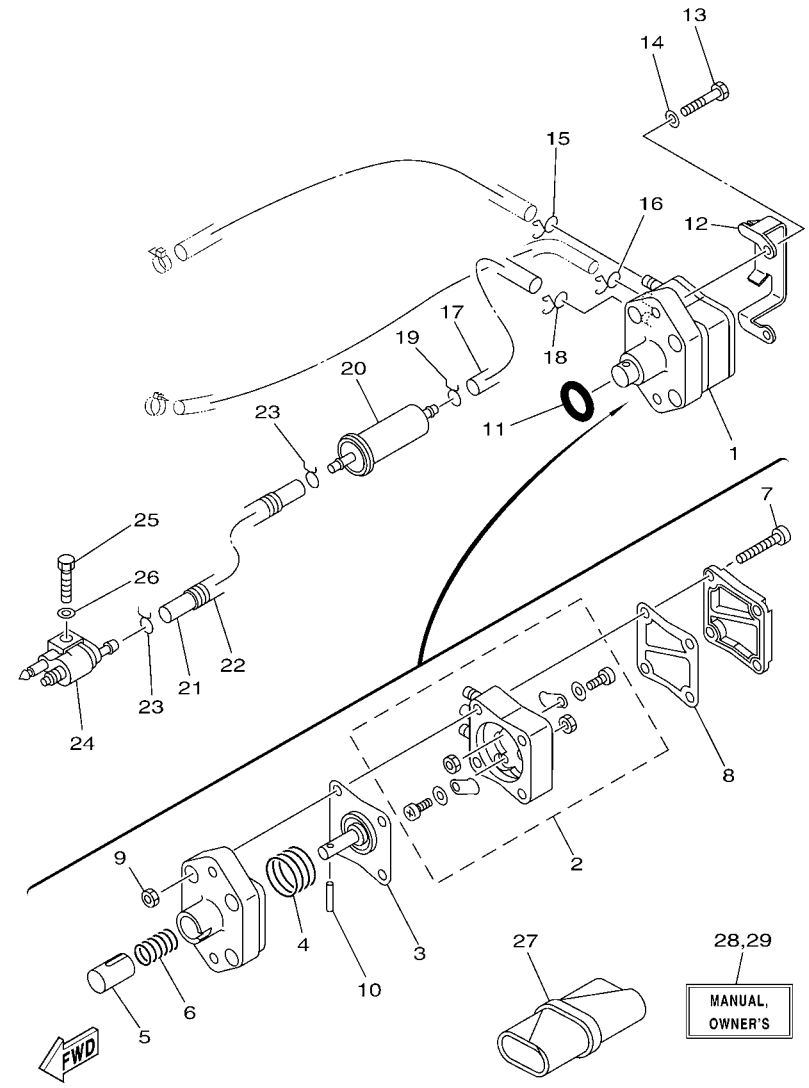

67C7300-G090

FIG. 9 FUEL CARBURANT

REF. NO.	PART NO. N° PIECES	DESCRIPTION DESCRIPTION	MHD	ED	ET			REMARKS REMARQUES
28	67C–28199–7A–E0	MANUAL,OWNER'S MANUEL D'UTILISATION	1	1	1			UR (E) UR (E)
	67C–28199–7A–F0	MANUAL,OWNER'S MANUEL D'UTILISATION	1	1	1			UR (F) UR (F)
	67C–28199–7A–S0	MANUAL,OWNER'S MANUEL D'UTILISATION	1	1	1			UR (ES) UR (ES)
	67C–28199–7A–G0	MANUAL,OWNER'S MANUEL D'UTILISATION	1	1	1			UR (D) UR (D)
	67C–28199–7A–D0	MANUAL,OWNER'S MANUEL D'UTILISATION	1	1	1			UR (NL) UR (NL)
	67C–28199–7A–H0	MANUAL,OWNER'S MANUEL D'UTILISATION	1	1	1			UR (I) UR (I)
29	67C–28199–8C–K0	MANUAL,OWNER'S MANUEL D'UTILISATION	1	1	1			UR (DK) UR (DK)
	67C–28199–8C–R0	MANUAL,OWNER'S MANUEL D'UTILISATION	1	1	1			UR (GR) UR (GR)
	67C–28199–8C–P0	MANUAL,OWNER'S MANUEL D'UTILISATION	1	1	1			UR (P) UR (P)
	67C–28199–8C–N0	MANUAL,OWNER'S MANUEL D'UTILISATION	1	1	1			UR (N) UR (N)
	67C–28199–8C–M0	MANUAL,OWNER'S MANUEL D'UTILISATION	1	1	1			UR (S) UR (S)
	67C–28199–8C–L0	MANUAL,OWNER'S MANUEL D'UTILISATION	1	1	1			UR (SF) UR (SF)

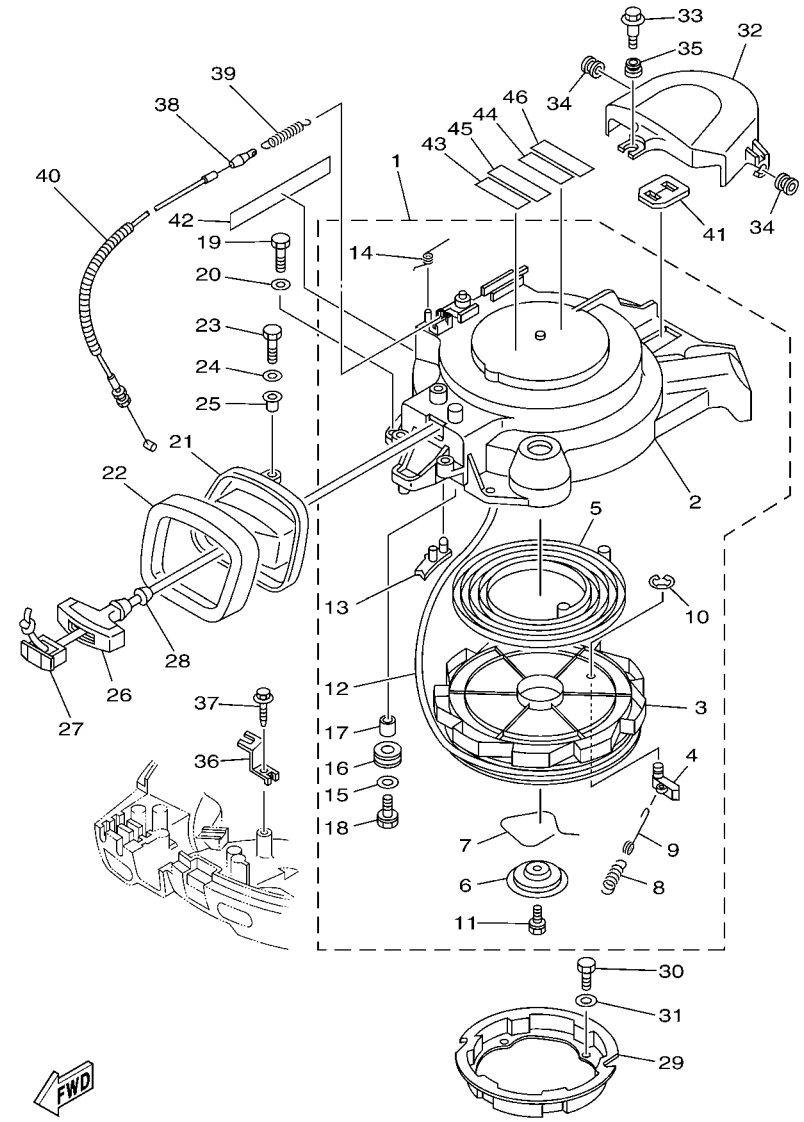

67C7300-G100

*1:CUT FROM 50M ROLLS,PART NO.90890-44374,CUTTING LENGTH 1.8M

*1:A PRELEVER SUR BOBINE 50M ,REFERENCE 90890-44374, LONGUEUR DE COUPE 1.8M

FIG. 10 STARTER DEMARREUR

REF. NO.	PART NO. N° PIECES	DESCRIPTION DESCRIPTION	MHD	ED	ET			REMARKS REMARQUES
1	67C–15710–00	STARTER ASSY DEMARREUR COMPLET	1					
2	67C–15711–00	.CASE, STARTER .CARTER DE DEMARREUR	1					
3	66T–15714–00	.DRUM, SHEAVE .TAMBOUR, POULIE	1					
4	63V–15741–00	.PAWL, DRIVE .CLIQUET, ENTRAINEMENT	1					
5	66T–15713–00	.SPRING, STARTER .RESSORT DE DEMARREUR	1					
6	66T–15716–00	.PLATE, DRIVE .PLAQUE, ENTRAINEMENT	1					
7	66T–15705–00	.SPRING, DRIVE PAWL .RESSORT DE CLIQUET	1					
8	66T–15767–00	.SPRING .RESSORT	1					
9	66T–15784–00	.SPRING, RETURN .RESSORT, RAPPEL	1					
10	63V–15744–00	.CIRCLIP .CIRCLIP	1					
11	63V–15768–00	.BOLT .BOULON	1					
12	*	.WIRE, STARTER (L:1800MM) .CABLE DE DEMARREUR (L:1800MM)	1					*1 *1
13	66T–15794–00	.STOPPER .BUTEE	1					
14	66T–15734–00	.SPRING, RETURN .RESSORT, RAPPEL	1					
15	6F5–15791–00	.WASHER, LOCK .RONDELLE-FREIN	1					
16	6F5–15752–00	.ROLLER, WIRE .GALET, CABLE	1					
17	6F5–15753–00	.BUSH .CHARBON	1					
18	97523–06425	.BOLT, WITH WASHER .VIS HEXAGONAL AVC RONDELLE	1					
19	97095–06025	BOLT BOULON	4					
20	92995–06600	WASHER RONDELLE	4					
21	67C–15758–00	GUIDE, ROPE GUIDE DE CABLE	1					
22	67C–15762–00	SEAL, RUBBER 2 JOINT CAOUTCHOUC 2	1					
23	97095–06025	BOLT BOULON	3					
24	92995–06600	WASHER RONDELLE	3					
25	90387–06M89	COLLAR COLLERETTE	3					
26	689–15755–01	HANDLE, STARTER POIGNEE, DE DEMARREUR	1					
27	6F5–15779–02	COVER COUVERCLE	1					

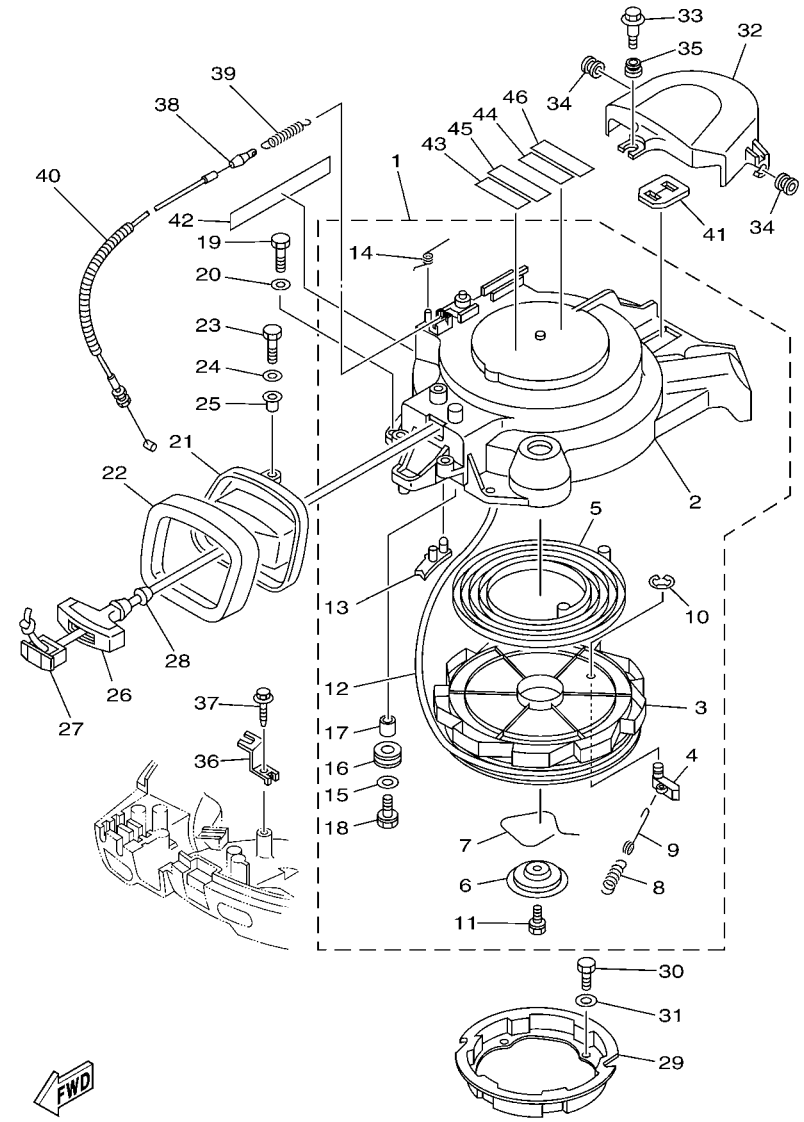

67C7300-G100

*1:CUT FROM 50M ROLLS,PART NO.90890-44374,CUTTING LENGTH 1.8M

*1:A PRELEVER SUR BOBINE 50M ,REFERENCE 90890-44374,
LONGUEUR DE COUPE 1.8M

FIG. 10 STARTER DEMARREUR

REF. NO.	PART NO. N° PIECES	DESCRIPTION DESCRIPTION	MHD	ED	ET			REMARKS REMARQUES
28	6A0–15789–00	DAMPER AMORTISSEUR	1					
29	67C–15723–00	PULLEY, STARTER POULIE DE DEMARREUR	1					
30	97095–06010	BOLT BOULON	4					
31	92995–06600	WASHER RONDELLE	4					
32	67C–46297–00	COVER, DUST COUVERCLE, POUSSIERE	1					
33	90109–06MA1	BOLT BOULON	1					
34	90480–10M16	GROMMET PASSE-FIL	2					
35	90480–12072	GROMMET PASSE-FIL	1					
36	66M–15774–00	STAY 4 SUPPORT 4	1					
37	90109–06M86	BOLT BOULON	1					
38	67C–15770–00	CABLE COMP., STARTER STOP CABLE, BUTEE DE DEMAR	1					
39	66T–15731–00	SPRING, RETURN RESSORT, RAPPEL	1					
40	90446–10M86	HOSE (L140) DURITE (L140)	1					
41	65W–81639–10	PLATE, ARMATURE FITTING PLAQUE, FIXATION D'INDUIT	1					
42	62Y–13437–62	MARK, CAUTION MAKER	1					
43	6AH–81995–40	LABEL, WARNING ETIQUETTE, AVERTISSEMENT	1					
44	6AH–81995–50	LABEL, WARNING ETIQUETTE, AVERTISSEMENT	1					
45	6AH–81994–40	LABEL, SAFETY ETIQUETTE, SECURITE	1					
46	6AH–81994–50	LABEL, SAFETY ETIQUETTE, SECURITE	1					

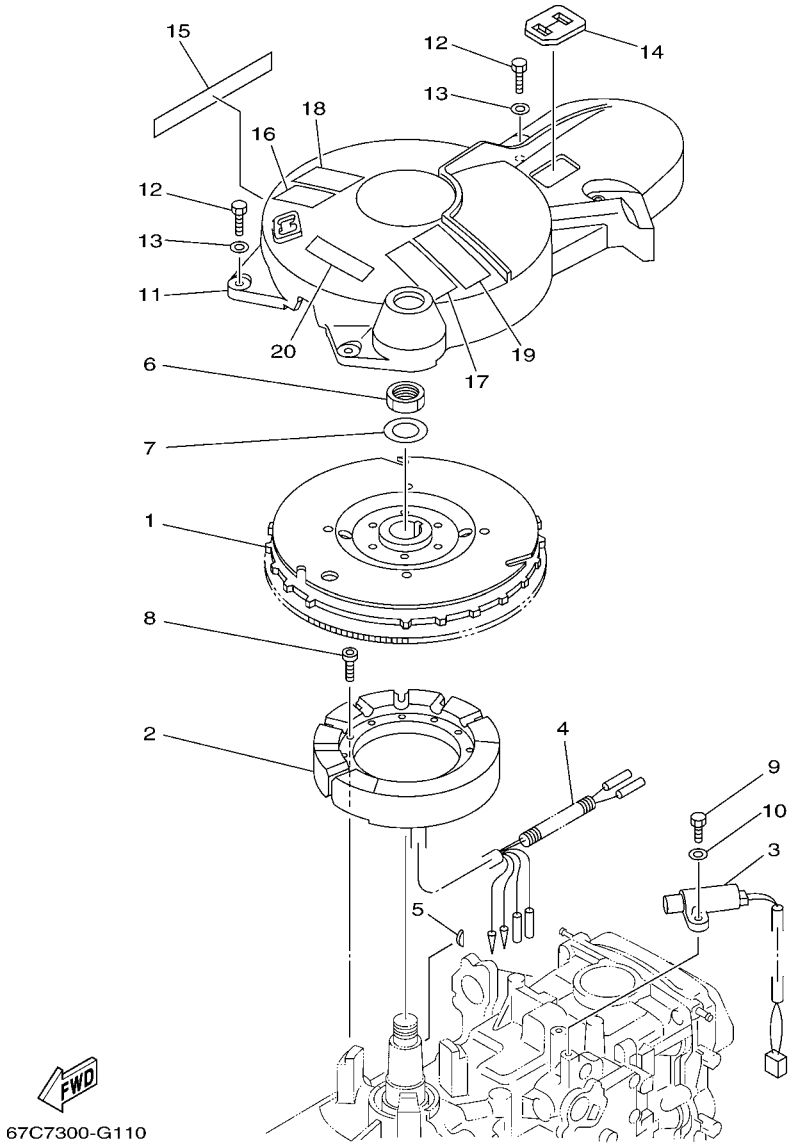

FIG. 11 GENERATOR GENERATRICE

REF. NO.	PART NO. N° PIECES	DESCRIPTION DESCRIPTION	MHD	ED	ET			REMARKS REMARQUES
1	65W–85550–01	ROTOR ASSY ROTOR CPLT		1	1			
	65W–85550–11	ROTOR ASSY ROTOR CPLT	1					
2	65W–85510–10	STATOR ASSY STATOR CPLT		1	1			
	65W–85510–00	STATOR ASSY STATOR CPLT	1					
3	65W–85580–00	COIL, PULSER BOBINE, PULSEUR	1	1	1			
4	90446–10M82	HOSE (L90) DURITE (L90)	1	1	1			
5	65W–11545–00	KEY, WOODRUFF CLAVETTE, DEMI-LUNE	1	1	1			
6	90170–20137	NUT ECROU	1	1	1			
7	90201–21M18	WASHER, PLATE RONDELLE, PLATE	1	1	1			
8	91380–05030	BOLT BOULON		3	3			
	91380–05025	BOLT BOULON	3					
9	97095–05016	BOLT BOULON	2	2	2			
10	92995–05600	WASHER RONDELLE	2	2	2			
11	67C–81337–00	COVER, FLYWHEEL COUVERCLE, VOLANT		1	1			
12	97095–06025	BOLT BOULON		4	4			
13	92995–06600	WASHER RONDELLE		4	4			
14	65W–81639–10	PLATE, ARMATURE FITTING PLAQUE, FIXATION D'INDUIT		1	1			
15	62Y–13437–62	MARK, CAUTION MAKER		1	1			
16	6AH–81995–40	LABEL, WARNING ETIQUETTE, AVERTISSEMENT		1	1			
17	6AH–81995–50	LABEL, WARNING ETIQUETTE, AVERTISSEMENT		1	1			
18	6AH–81994–40	LABEL, SAFETY ETIQUETTE, SECURITE		1	1			
19	6AH–81994–50	LABEL, SAFETY ETIQUETTE, SECURITE		1	1			
20	6AG–81996–00	MARK MARQUE		1	1			

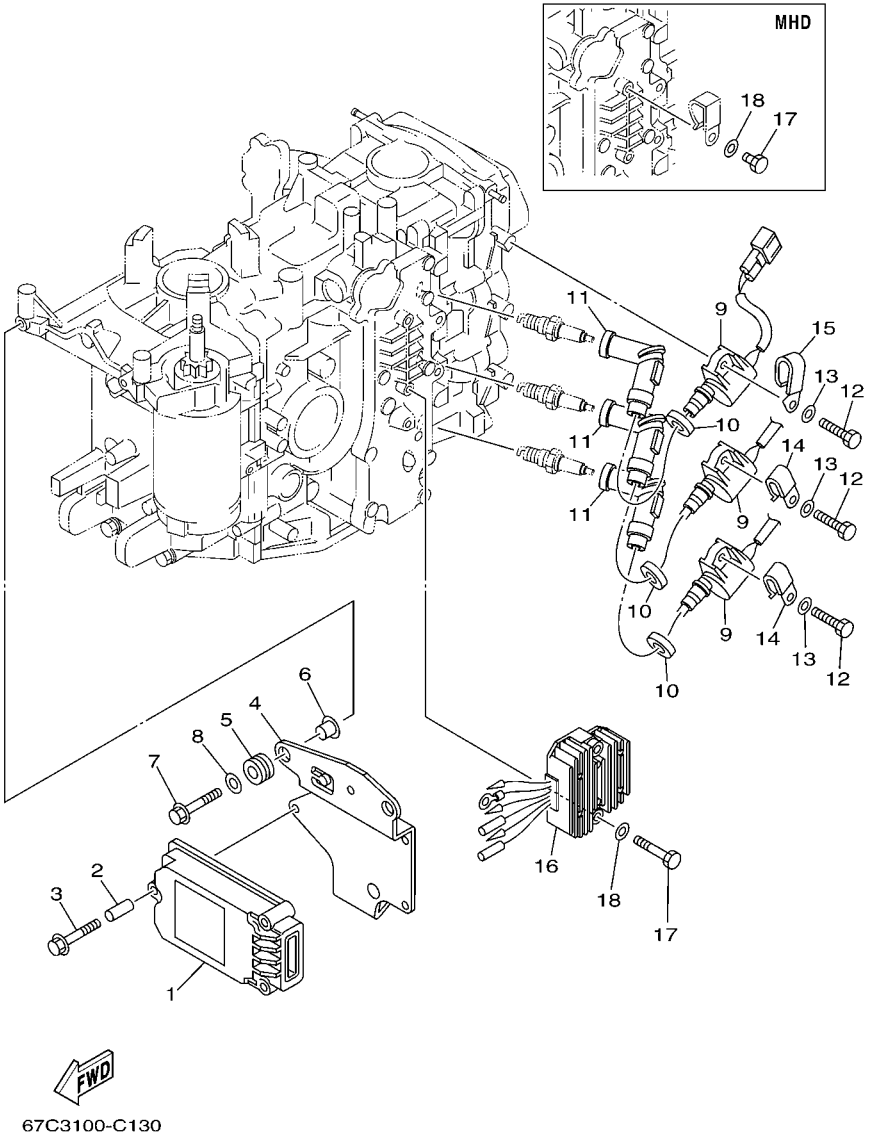

FIG. 12 ELECTRICAL 1 — PARTIE ELECTRIQUE 1

REF. NO.	PART NO. N° PIECES	DESCRIPTION DESCRIPTION	MHD	ED	ET			REMARKS REMARQUES
1	67C–85540–01	C.D.I. UNIT ASSY BLOC C.D.I.	1	1	1			
2	65W–86129–00	COLLAR COLLERETTE	3	3	3			
3	65W–8252V–00	SCREW, SPECIAL VIS, SPECIALE	3	3	3			
4	67C–85542–00	BRACKET SUPPORT	1	1	1			
5	65W–85547–00	DAMPER AMORTISSEUR	3	3	3			
6	65W–86129–10	COLLAR COLLERETTE	3	3	3			
7	67C–8252V–00	BOLT, FLANGE (M6X25) BOULON, A COLLERETTE (M6X25)	3	3	3			
8	67C–85554–00	WASHER, ROTOR RONDELLE, ROTOR	3	3	3			
9	67C–85570–00	IGNITION COIL ASSY BOBINE D'ALLUMAGE (ENS.)	3	3	3			
10	90480–25161	GROMMET PASSE-FIL	3	3	3			
11	6G8–82370–30	PLUG CAP ASSY ANTIPARASITE	3	3	3			
12	97095–06020	BOLT BOULON	3	3	3			
13	92995–06600	WASHER RONDELLE	3	3	3			
14	90465–06M90	CLAMP BRIDE	2	2	2			
15	90465–06M88	CLAMP BRIDE	1	1	1			
16	65W–81960–10	RECTIFIER & REGULATOR ASSY REDRESSEUR REGULATEUR CPLT		1	1			
17	97095–06040	BOLT BOULON		2	2			
	97095–06012	BOLT BOULON	1					
18	92995–06600	WASHER RONDELLE		2	2			
	92995–06600	WASHER RONDELLE	1					

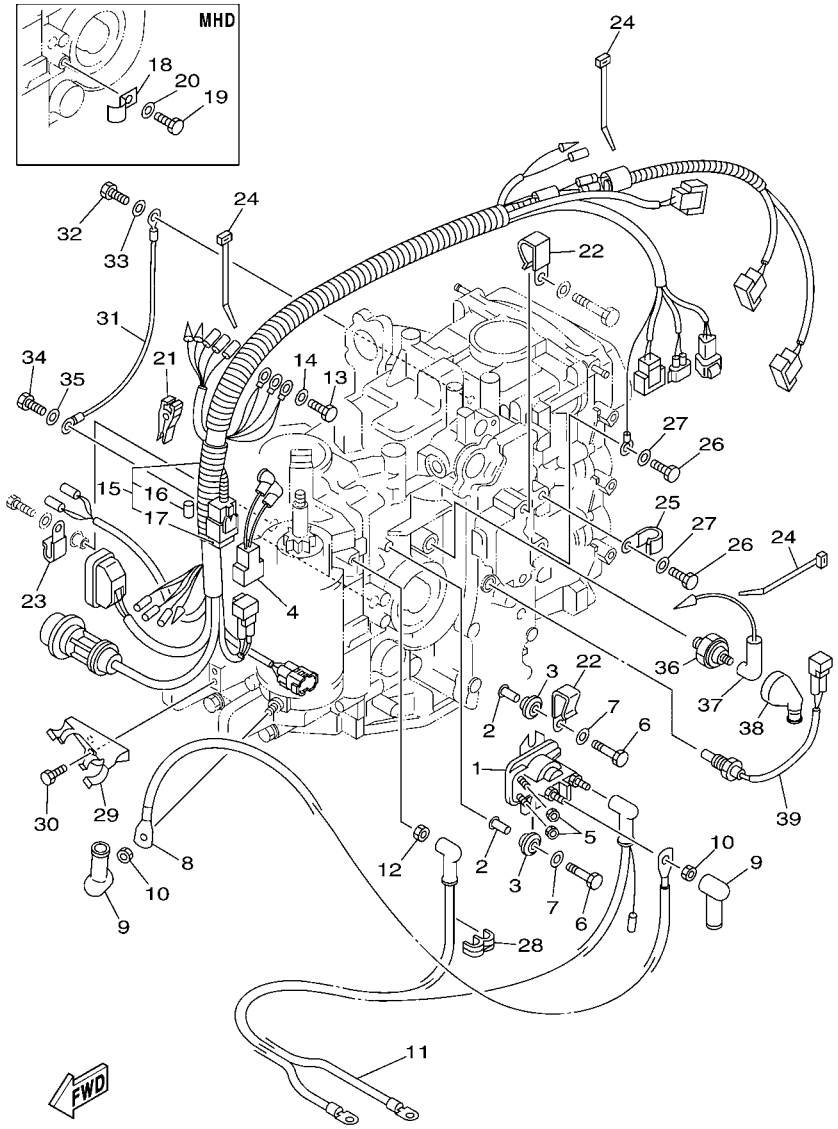

FIG. 13 ELECTRICAL 2 — PARTIE ELECTRIQUE 2

REF. NO.	PART NO. N° PIECES	DESCRIPTION DESCRIPTION	MHD	ED	ET			REMARKS REMARQUES
1	65W–81941–00	STARTER RELAY ASSY LANCEUR RELAIS (ENS.)		1	1			
2	65W–8191C–00	COLLAR COLLERETTE		2	2			
3	65W–81922–00	GROMMET OEILLET CAOUTCHOUC		2	2			
4	67C–82509–00	WIRE, SUB LEAD FIL, SECONDAIRE		1	1			
5	65W–8182A–00	NUT ECROU		2	2			
6	97095–06030	BOLT BOULON		2	2			
7	92995–06600	WASHER RONDELLE		2	2			
8	65W–82117–00	WIRE, LEAD FIL		1	1			
9	6G5–82119–10	COVER, LEAD WIRE GARNITURE, FIL		2	2			
10	65W–8182B–00	NUT, SPECIAL ECROU, SPECIAL		2	2			
11	67C–82105–00	WIRE HARNESS FAISCEAU DE FILS		1	1			
12	65W–8182B–00	NUT, SPECIAL ECROU, SPECIAL		1	1			
13	97095–06012	BOLT BOULON		1	1			
14	92995–06600	WASHER RONDELLE		1	1			
15	67C–82590–50	WIRE HARNESS ASSY FAISCEAU DE FILS COMPLET			1			
	67C–82590–10	WIRE HARNESS ASSY FAISCEAU DE FILS COMPLET		1				
	67C–82590–00	WIRE HARNESS ASSY FAISCEAU DE FILS COMPLET	1					
16	67F–82151–00	.FUSE (20A) .FUSIBLE (20A)		2	2			
17	67F–8215B–00	.CAP (BLACK) .BOUCHON (NOIR)		1	1			
18	90465–08M63	CLAMP BRIDE	1					
19	97095–06012	BOLT BOULON	1					
20	92995–06600	WASHER RONDELLE	1					
21	67F–2812A–00	PULLER, FUSE TENDEUR, FUSIBLE		1	1			
22	90465–05M87	CLAMP BRIDE	2	2	2			
23	90465–06M90	CLAMP BRIDE	1	1	1			
24	90465–13M18	CLAMP BRIDE	3	3	3			
25	90465–08M75	CLAMP BRIDE	1	1	1			

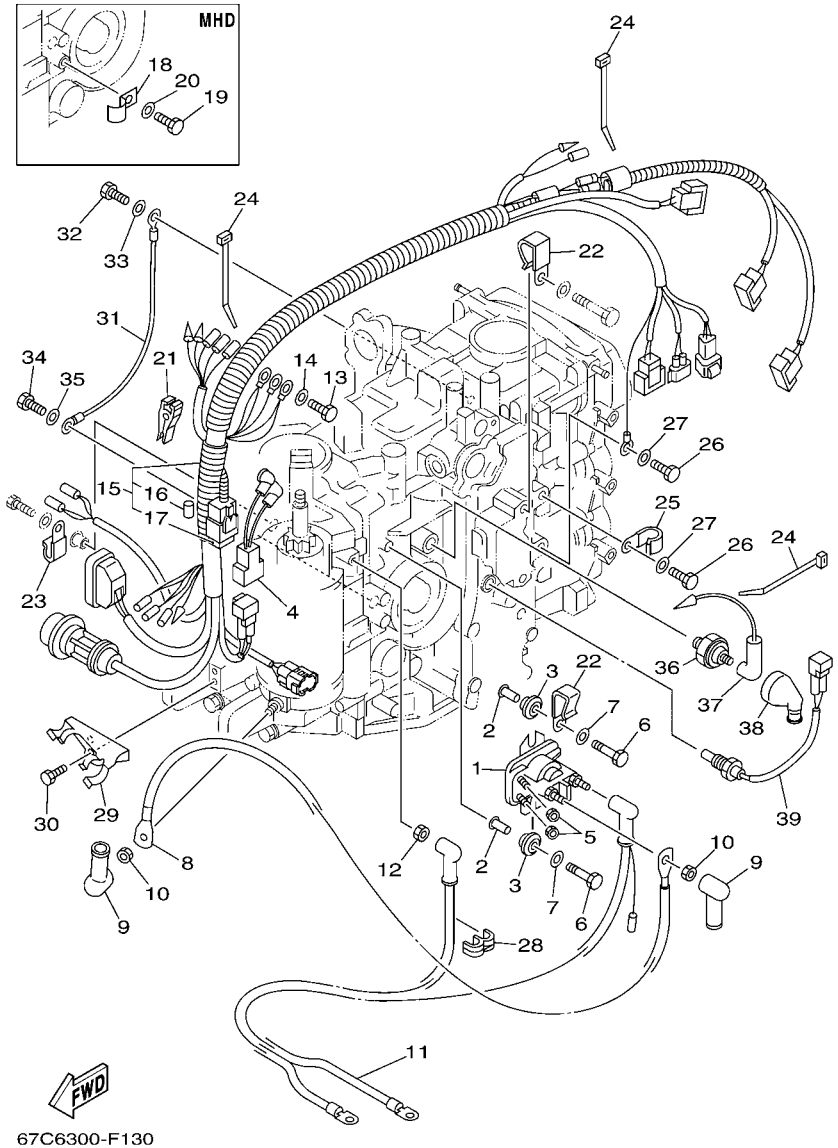

FIG. 13 ELECTRICAL 2 — PARTIE ELECTRIQUE 2

REF. NO.	PART NO. N° PIECES	DESCRIPTION DESCRIPTION	MHD	ED	ET			REMARKS REMARQUES
26	97095–06012	BOLT BOULON	3	3	3			
27	92995–06600	WASHER RONDELLE	3	3	3			
28	90464–10M57	CLAMP BRIDE		1	1			
29	67C–82594–00	CLAMP BRIDE		1	1			
30	97095–05012	BOLT BOULON		2	2			
31	67C–82519–00	WIRE, EARTH LEAD FIL, MASSE	1	1	1			
32	97095–08012	BOLT BOULON	1	1	1			
33	92995–08600	WASHER RONDELLE	1	1	1			
34	97095–06012	BOLT BOULON	1	1	1			
35	92995–06600	WASHER RONDELLE	1	1	1			
36	65W–82504–00	OIL PRESSURE SWITCH ASSY CONTACTEUR DE PRESSION D'HUILE	1	1	1			
37	65W–82127–00	WIRE, LEAD 2 FIL 2	1	1	1			
38	65W–82532–00	CAP COUVERCLE	1	1	1			
39	67C–85790–00	THERMOSENSOR ASSY SENSITOMETRE	1	1	1			

FIG. 14 ELECTRICAL 3 PARTIE ELECTRIQUE 3

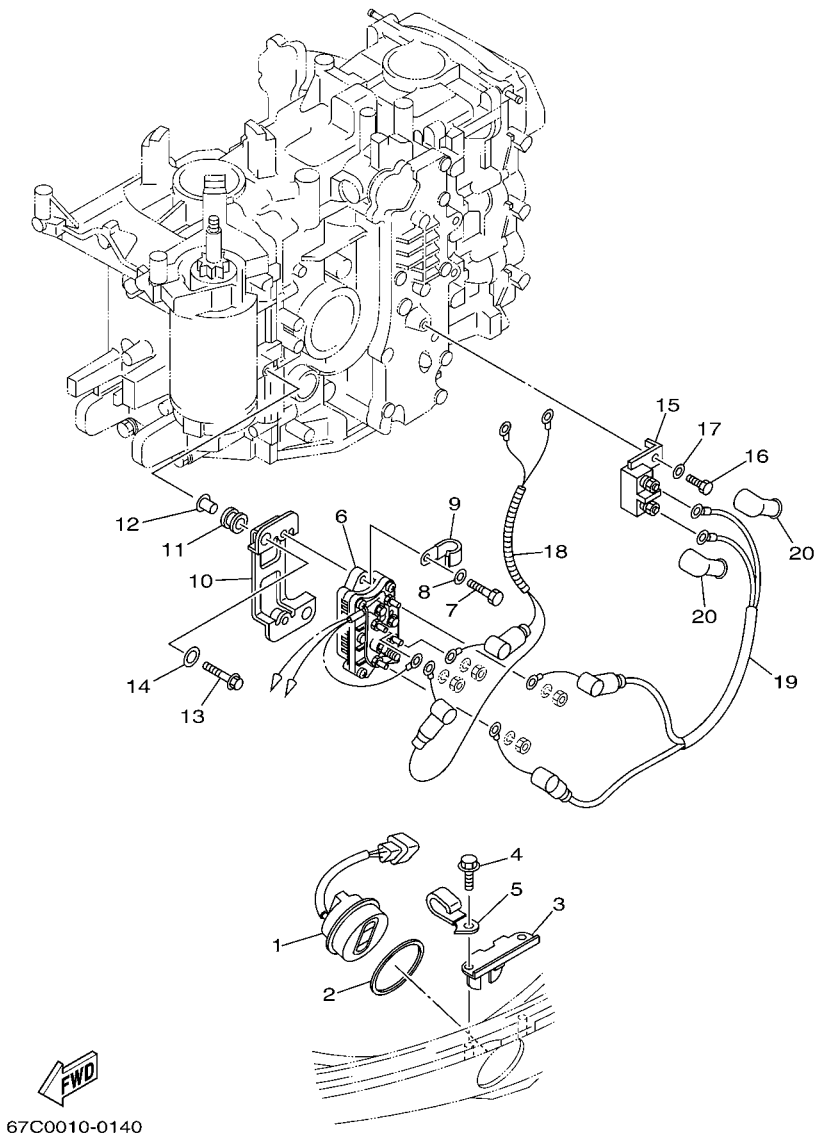

REF. NO.	PART NO. N° PIECES	DESCRIPTION DESCRIPTION	MHD	ED	ET			REMARKS REMARQUES
1	63D–82563–10	TRIM & TILT SWITCH ASSY INCLINER ET PARER COMMUTATEUR			1			
2	6E5–82587–00	GASKET JOINT			1			
3	62Y–83614–00	BRACKET SUPPORT			1			
4	90109–06M86	BOLT BOULON			2			
5	90465–06M88	CLAMP BRIDE			1			
6	6H1–81950–00	RELAY ASSY RELAIS COMPLET			1			
7	97095–06020	BOLT BOULON			2			
8	92995–06600	WASHER RONDELLE			2			
9	90465–08M75	CLAMP BRIDE			1			
10	67C–81948–00	BRACKET SUPPORT			1			
11	6A0–82317–00	DAMPER, IGNITION COIL AMORTISSEUR, BOBINE D'ALLUM			2			
12	90387–06119	COLLAR COLLERETTE			2			
13	95895–06030	BOLT, FLANGE BOULON			2			
14	90201–12M16	WASHER, PLATE RONDELLE, PLATE			2			
15	6H5–81920–00	TERMINAL ASSY BORNE			1			
16	97095–06012	BOLT BOULON			1			
17	92995–06600	WASHER RONDELLE			1			
18	67C–81949–00	WIRE, LEAD FIL			1			
19	67C–81949–10	WIRE, LEAD FIL			1			
20	6G5–82119–00	COVER, LEAD WIRE GARNITURE, FIL			2			

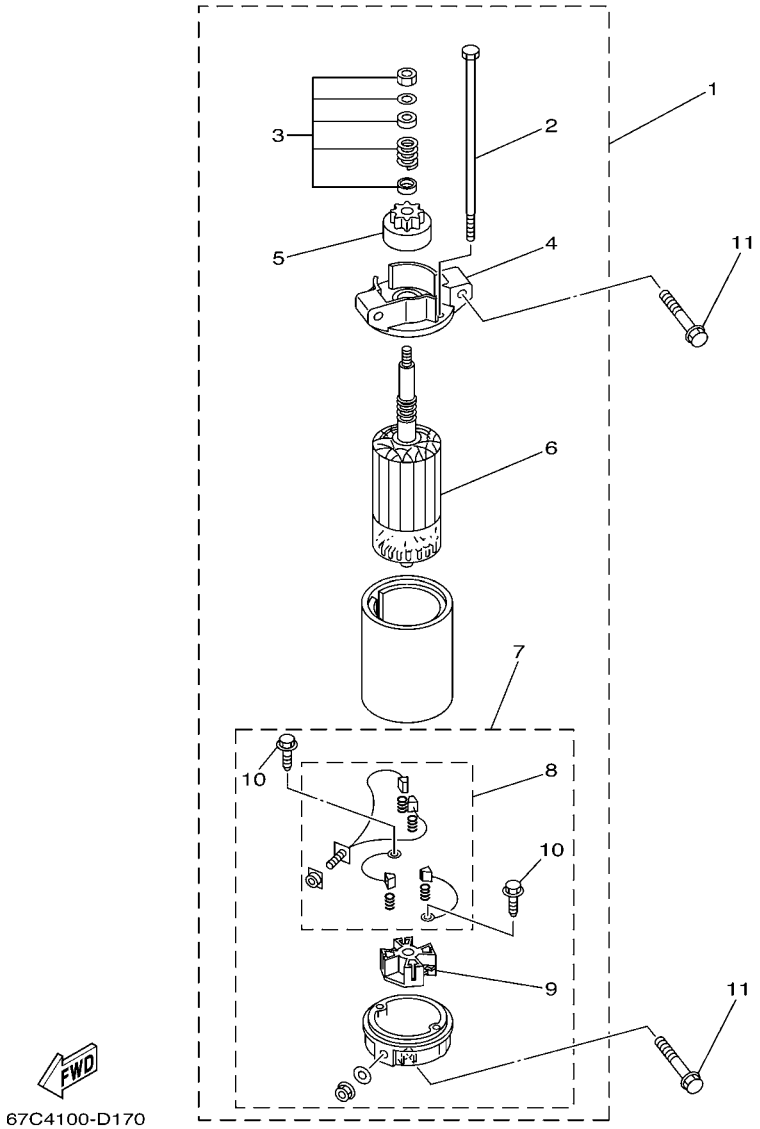

FIG. 15 STARTING MOTOR DEMARREUR ELECTRIQUE

REF. NO.	PART NO. N° PIECES	DESCRIPTION DESCRIPTION	MHD	ED	ET			REMARKS REMARQUES
1	67C–81800–02	STARTING MOTOR ASSY DEMARREUR ELECTRIQUE COMPLET		1	1			
2	67C–81826–00	.BOLT .BOULON		2	2			
3	65W–81857–03	.RETAINER .ARRETOIR		1	1			
4	65W–81830–00	.FRONT BRACKET ASSY .SUPPORT AVANT		1	1			
5	65W–81807–00	.GEAR ASSY, STARTING MOTOR .PIGNON, DEMARREUR ELECTRIQUE		1	1			
6	67C–81850–01	.ARMATURE ASSY .INDUIT		1	1			
7	65W–81820–00	.REAR BRACKET ASSY .SUPPORT ARRIERE COMPLET		1	1			
8	65W–81801–00	..BRUSH SET ..CHARBON		1	1			
9	65W–81840–00	..BRUSH HOLDER ASSY ..SUPPORT DE CHARBON		1	1			
10	65W–8182S–00	..SCREW ..VIS		2	2			
11	90119–08M39	BOLT, WITH WASHER BOULON, AVEC RONDELLE		3	3			

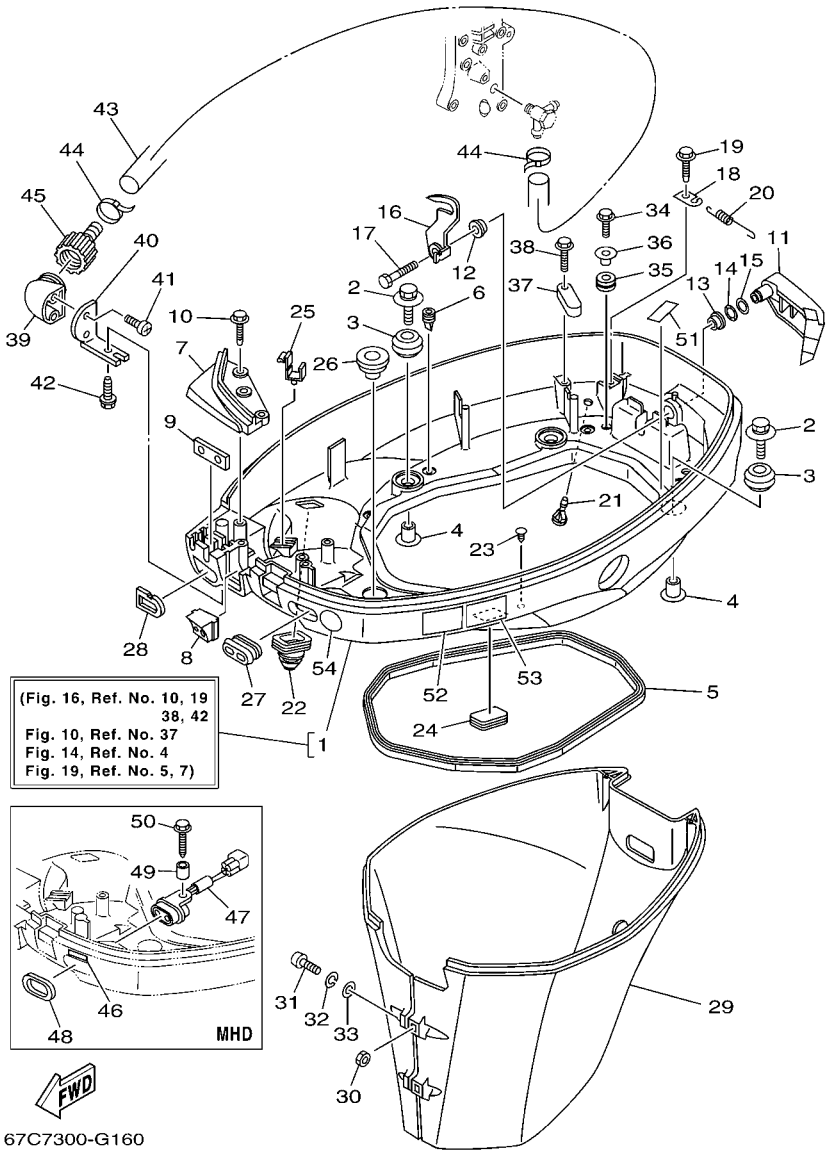

FIG. 16 BOTTOM COWLING CAPOT INFERIEUR

REF. NO.	PART NO. N° PIECES	DESCRIPTION DESCRIPTION	MHD	ED	ET			REMARKS REMARQUES
1	67C–42710–12–4D	BOTTOM COWLING ASSY ENS. EMBASE			1			WITH TAPPING BOLT WITH TAPPING BOLT
	67C–42710–02–4D	BOTTOM COWLING ASSY ENS. EMBASE	1	1				WITH TAPPING BOLT WITH TAPPING BOLT
2	90119–06M08	BOLT, WITH WASHER BOULON, AVEC RONDELLE	4	4	4			
3	90480–09M12	GROMMET PASSE-FIL	4	4	4			
4	90387–06060	COLLAR COLLERETTE	4	4	4			
5	62Y–42716–00	RUBBER, SEAL 1 JOINT EN CAOUTCHOUC 1	1	1	1			
6	65W–42717–00	RUBBER, SEAL 2 JOINT EN CAOUTCHOUC 2	4	4	4			
7	67C–42738–00–4D	PLATE, FITTING ETRIER	1	1	1			
8	62Y–42725–30	GROMMET PASSE-FIL			1			
	62Y–42725–00	GROMMET PASSE-FIL		1				
	67C–42725–00	GROMMET PASSE-FIL	1					
9	62Y–42727–00	GROMMET PASSE-FIL	1	1	1			
10	90109–06M81	BOLT BOULON	3	3	3			
11	67C–42815–00–4D	LEVER, CLAMP LEVIER, PRESSE	1	1	1			
12	90386–12M37	BUSH DOUILLE	1	1	1			
13	90386–12MA2	BUSH DOUILLE	1	1	1			
14	90206–12052	WASHER, WAVE RONDELLE, ONDULEE	1	1	1			
15	90201–12M07	WASHER, PLATE RONDELLE, PLATE	1	1	1			
16	67C–42816–01	LEVER, CLAMP LEVIER, PRESSE	1	1	1			
17	97095–06012	BOLT BOULON	1	1	1			
18	66T–43144–00	HOOK, SPRING CROCHET	1	1	1			
19	90109–06M86	BOLT BOULON	1	1	1			
20	90506–18M40	SPRING, TENSION RESSORT, TENSION	1	1	1			
21	6H3–44391–01	NIPPLE, HOSE RACCORD D'ESSENCE	1	1	1			
22	6H1–42726–21	GROMMET PASSE-FIL			1			FLUSHING KIT FLUSHING KIT
	65W–42724–10	GROMMET PASSE-FIL	1	1				FLUSHING KIT FLUSHING KIT
23	90338–07004	PLUG PLOT	1	1	1			

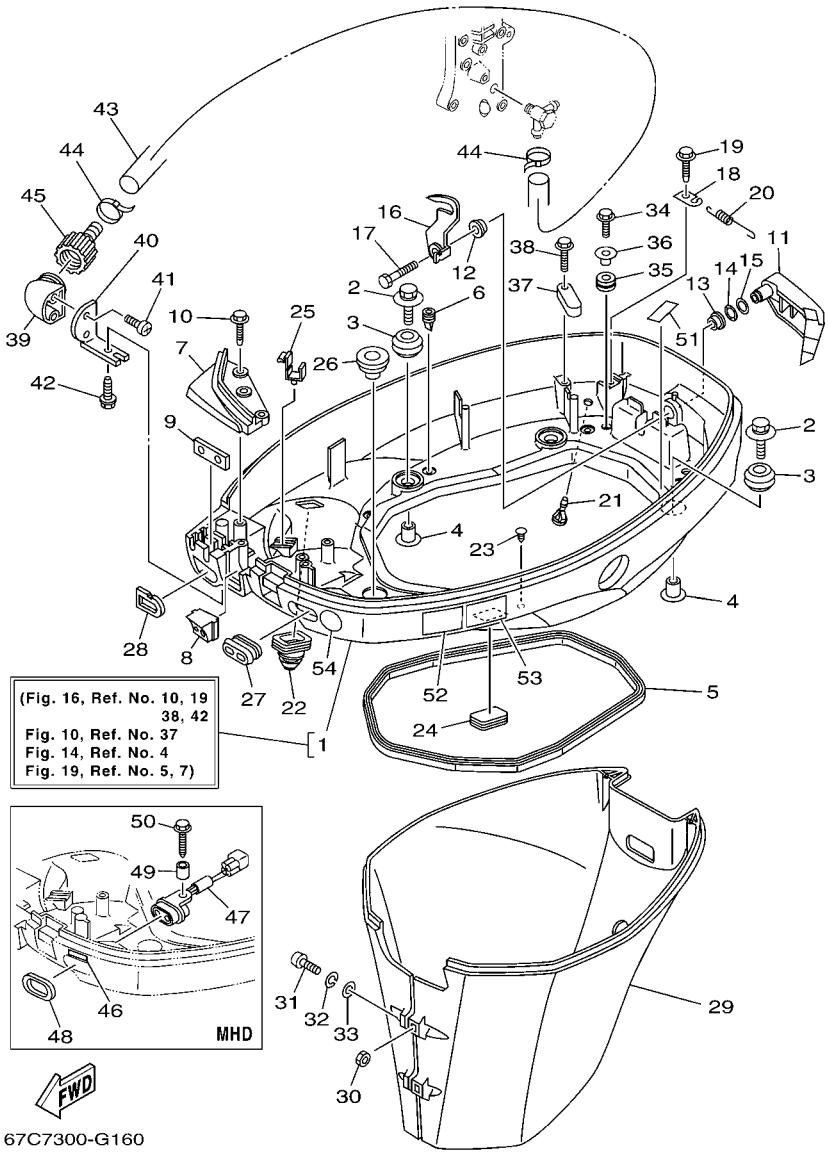

FIG. 16 BOTTOM COWLING CAPOT INFERIEUR

REF. NO.	PART NO. N° PIECES	DESCRIPTION DESCRIPTION	MHD	ED	ET			REMARKS REMARQUES
24	6H4–42726–00	GROMMET PASSE-FIL	1	1	1			FLUSHING KIT FLUSHING KIT
25	90464–09M13	CLAMP BRIDE	1	1	1			
26	676–42727–00	GROMMET PASSE-FIL	1	1	1			
27	6H3–42727–00	GROMMET PASSE-FIL		1	1			
28	61N–24329–00	SEAL JOINT	1	1	1			
29	67C–42741–00–4D	APRON CAPOT LATERAL	1		1			S(16.1") S(16.1")
	67C–42741–10–4D	APRON CAPOT LATERAL	1	1	1			L(21.0") L(21.0")
30	95380–06600	NUT, HEXAGON ECROU	2	2	2			
31	97880–06025	SCREW, PAN HEAD VIS, TETE TRONCONIQUE	2	2	2			
32	92990–06100	WASHER, SPRING RONDELLE, GROWER	2	2	2			
33	92990–06600	WASHER, PLATE RONDELLE, PLATE	2	2	2			
34	90109–06M80	BOLT BOULON	2	2	2			
35	90480–13M24	GROMMET PASSE-FIL	2	2	2			
36	90387–06M43	COLLAR COLLERETTE	2	2	2			
37	6E5–82588–00	PLATE PLAQUE	1	1	1			
38	90109–06M81	BOLT BOULON	1	1	1			
39	68T–12572–00	ADAPTER ADAPTATEUR	1	1	1			FLUSHING KIT FLUSHING KIT
40	69W–12535–00	PLATE PLAQUE	1	1	1			FLUSHING KIT FLUSHING KIT
41	90167–06002	SCREW, TAPPING VIS, TETE FRAISEE	2	2	2			FLUSHING KIT FLUSHING KIT
42	90109–06M80	BOLT BOULON	1	1	1			FLUSHING KIT FLUSHING KIT
43	67C–24312–00	PIPE 2 DURITE 2	1	1	1			FLUSHING KIT FLUSHING KIT
44	90465–11M10	CLAMP BRIDE	2	2	2			FLUSHING KIT FLUSHING KIT
45	6R3–12580–00	JOINT ASSY ARTICULER (ENS.)	1	1	1			FLUSHING KIT FLUSHING KIT
46	67C–85415–00	MARK, SIGNAL LAMP ETIQUETTE	1					
47	62Y–84301–00	PILOT LIGHT ASSY 1 LAMPE-TEMOIN 1	1					
48	6H4–83589–00	GASKET GARNITURE	1					
49	90387–06M87	COLLAR COLLERETTE	1					

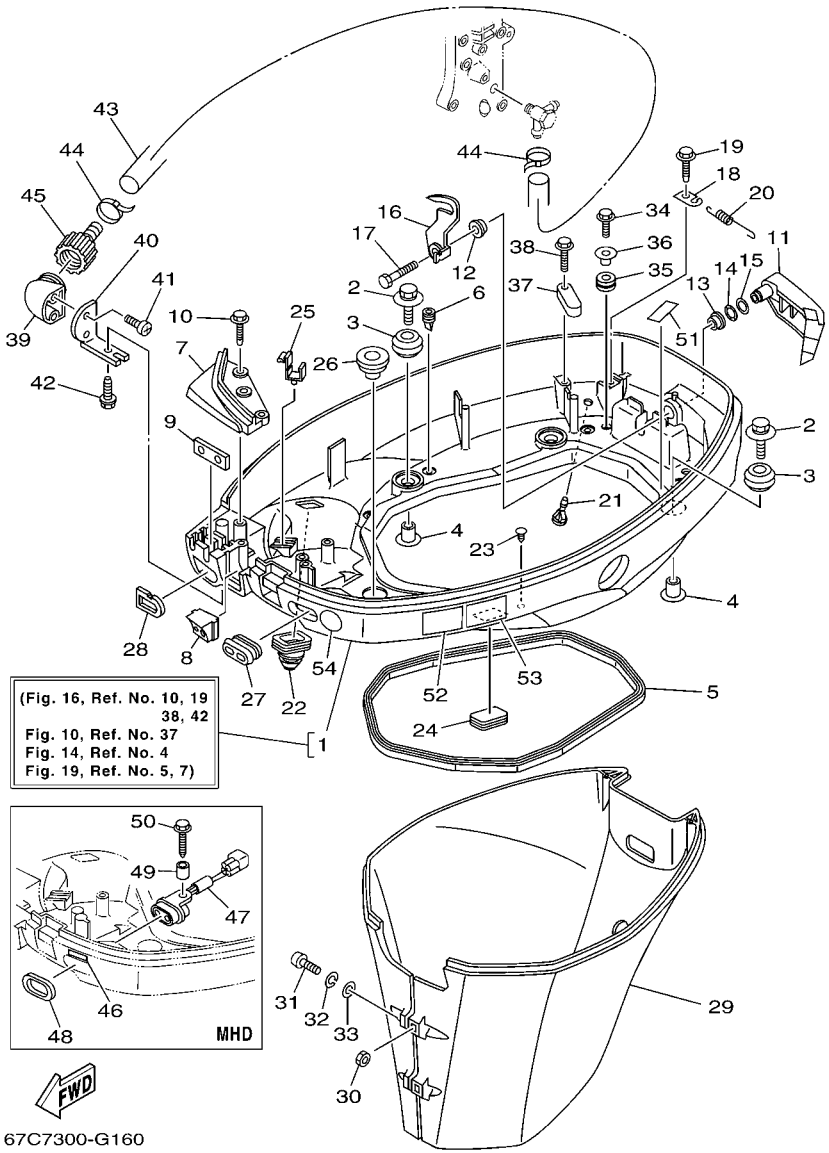

FIG. 16 BOTTOM COWLING CAPOT INFERIEUR

REF. NO.	PART NO. N° PIECES	DESCRIPTION DESCRIPTION	MHD	ED	ET			REMARKS REMARQUES
50	90109–06MA2	BOLT BOULON	1					
51	62Y–82377–00	LABEL ETIQUETTE	1	1	1			
52	6AH–42794–40	LABEL, WARNING (GENERAL) ETIQUETTE, AVERTISSEMENT	1	1	1			
53	6AH–42794–50	LABEL, WARNING (GENERAL) ETIQUETTE, AVERTISSEMENT	1	1	1			
54	6G8–2415E–00	LABEL, CAUTION ETIQUETTE, RECOMMANDATION	1	1	1			FOR SAV FOR SAV

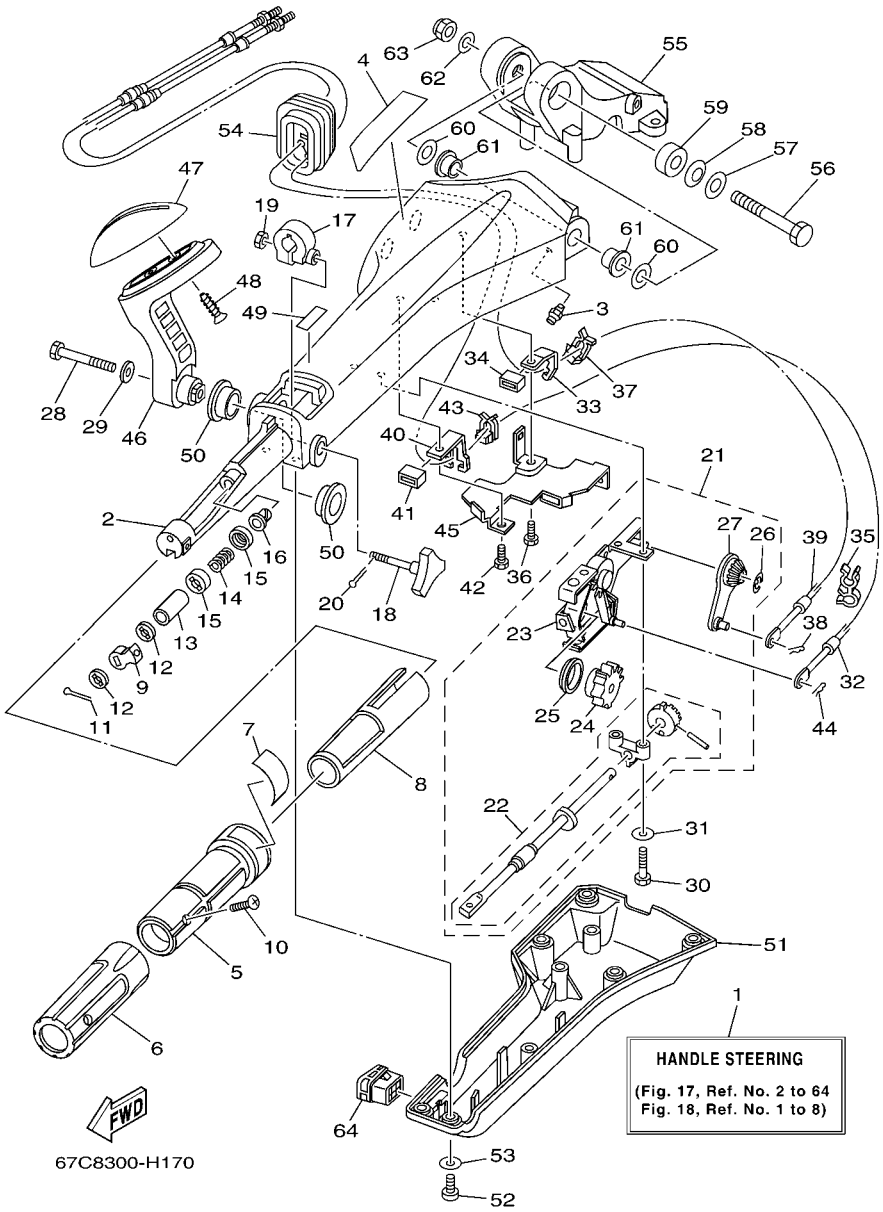

FIG. 17 STEERING 1 — DIRECTION 1

REF. NO.	PART NO. N° PIECES	DESCRIPTION DESCRIPTION	MHD	ED	ET			REMARKS REMARQUES
1	6X4–42101–F2–4D	HANDLE, STEERING POIGNEE	1					
2	6X4–42111–01–4D	HANDLE, STEERING POIGNEE	1					
3	93700–06M03	NIPPLE, GREASE PION	1					
4	6X4–48215–10	GRAPHIC ADHESIF	1					
5	6X4–42119–00	GRIP, STEERING HANDLE POIGNEE, BARRE FRANCHE	1					
6	6X4–42177–00	RUBBER, HANDLE CAOUTCHOUC, POIGNEE	1					
7	6X4–42137–00	INDICATOR, THROTTLE INDICATEUR, ACCELERATION	1					
8	6X4–41291–00	BUSHING COUSSINET	1					
9	6X4–44139–00	COLLAR COLLIER	1					
10	90142–05001	SCREW, COUNTERSUNK VIS, TETE NOYEE	1					
11	91490–20010	PIN. COTTER GOUPILLE	1					
12	6X4–44177–00	WASHER RONDELLE	2					
13	6X4–42128–00	COLLAR, DISTANCE 1 COLLIER, D'ENTRETOISE 1	1					
14	90501–23215	SPRING, COMPRESSION RESSORT, COMPRESSION	1					
15	6X4–44188–00	WASHER RONDELLE	2					
16	90386–08032	BUSH DOUILLE	1					
17	63D–42126–00	FRICTION, STEERING HANDLE GRIP CUVETTE, POIGNEE DE DIRECTION	1					
18	6X4–48154–00	KNOB, THROTTLE BOUTON, ACCELERATEUR	1					
19	95380–06600	NUT, HEXAGON ECROU	1					
20	91490–20010	PIN. COTTER GOUPILLE	1					
21	6X4–44100–10	SHIFT LINK ASSY MAILLON DE SELECTEUR	1					
22	6X4–42115–00	.SHAFT, STEERING HANDLE .AXE, BARRE FRANCHE	1					
23	6X4–44102–00	.SHIFT ASSIST ASSY. .SELECTEUR DE MAINTIEN	1					
24	6X4–47731–00	.GEAR, DRIVE .PIGNON D'ENTRAINEMENT	1					
25	6X4–44132–00	.BUSHING .COUSSINET	1					
26	6X4–14137–00	.CLIP .JONC	1					
27	6X4–48261–00	.ARM, THROTTLE .BRAS, ACCELERATION	1					

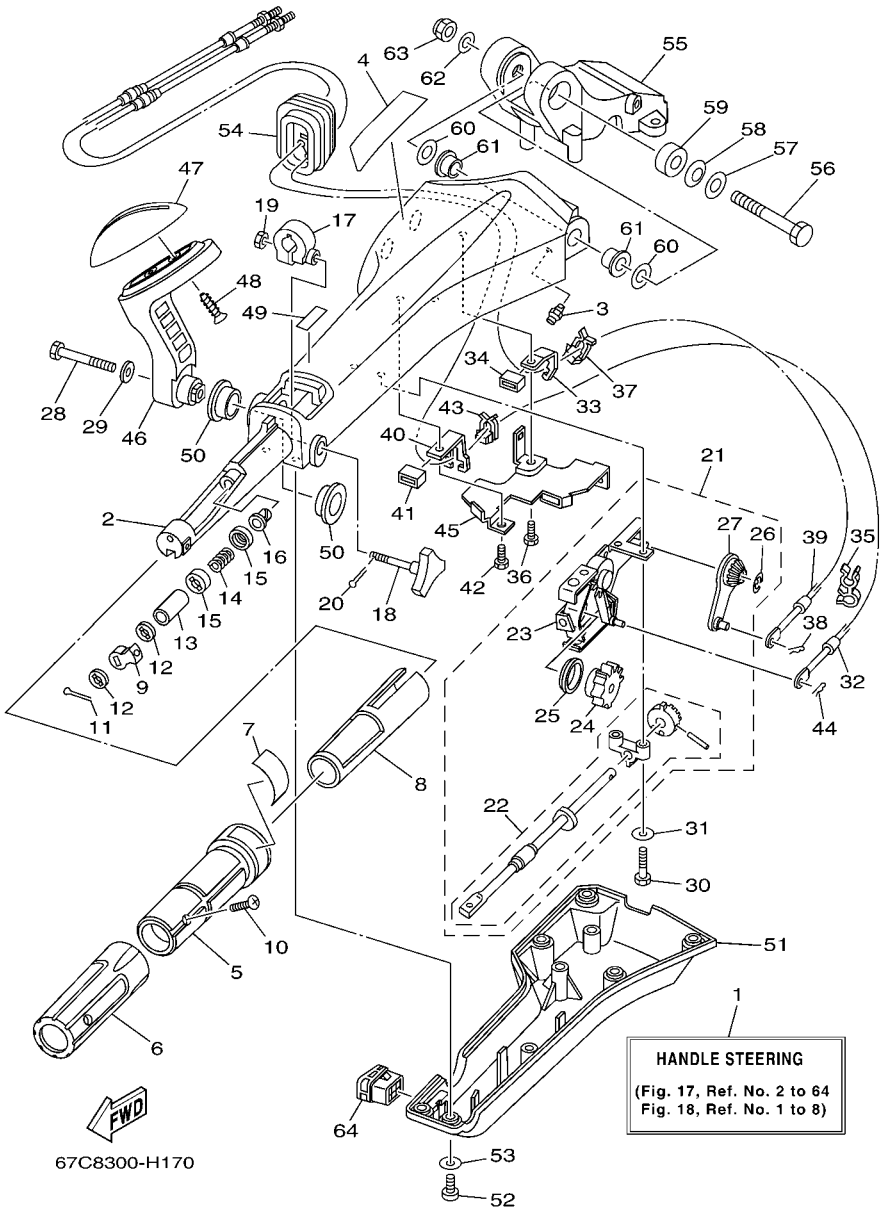

FIG. 17 STEERING 1 — DIRECTION 1

REF. NO.	PART NO. N° PIECES	DESCRIPTION DESCRIPTION	MHD	ED	ET			REMARKS REMARQUES
28	97095–08040	BOLT BOULON	1					
29	92995–08600	WASHER RONDELLE	1					
30	97095–06030	BOLT BOULON	2					
31	92995–06600	WASHER RONDELLE	2					
32	67C–48321–11	CABLE CABLE	1					
33	6X4–48538–00	CLAMP, CABLE 1 COLLIER	1					
34	6X4–26367–00	PROTECTOR PROTECTEUR	1					
35	90464–09M42	CLAMP BRIDE	1					
36	97095–06014	BOLT BOULON	1					
37	63D–48538–00	CLAMP, CABLE 1 COLLIER	1					
38	90468–10005	CLIP JONC	1					
39	69W–26301–00	THROTTLE CABLE ASSY CABLE D'ACCELERATEUR	1					
40	6X4–48538–10	CLAMP, CABLE 1 COLLIER	1					
41	6X4–26367–00	PROTECTOR PROTECTEUR	1					
42	97095–06014	BOLT BOULON	1					
43	63D–48538–00	CLAMP, CABLE 1 COLLIER	1					
44	90468–10005	CLIP JONC	1					
45	6X4–42159–00	STAY SUPPORT	1					
46	6X4–44159–00–4D	HANDLE, GEAR SHIFT POIGNEE, LEVIER D'EMBRAYAGE	1					
47	6X4–44173–00	LEVER, SHIFT CONTROL POIGNEE, INVERSION	1					
48	97780–60920	SCREW, TAPPING VIS, TETE BOMBEE	2					
49	6G8–44191–00	INDICATOR, SHIFT ETIQUETTE, EMBRAYAGE	1					
50	90386–26MA3	BUSH DOUILLE	2					
51	6X4–42131–01	COVER, HANDLE STEERING COUVERCLE	1					
52	97885–06016	SCREW, PAN HEAD VIS, A ENCOCHE	6					
53	92995–06600	WASHER RONDELLE	6					
54	6X4–42725–10	GROMMET PASSE-FIL	1					

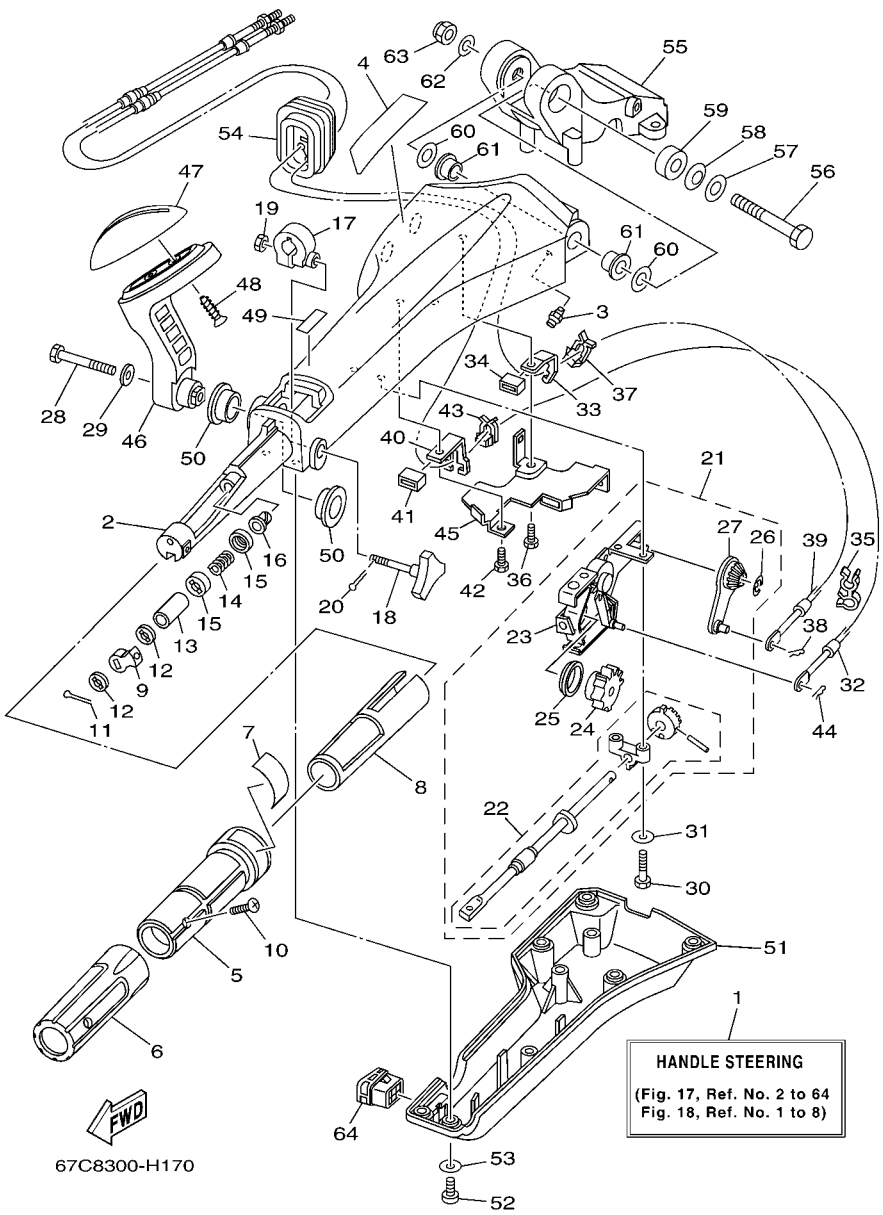

FIG. 17 STEERING 1 — DIRECTION 1

REF. NO.	PART NO. N° PIECES	DESCRIPTION DESCRIPTION	MHD	ED	ET			REMARKS REMARQUES
55	63D–42121–22–4D	BRACKET SUPPORT	1					
56	90101–12014	BOLT BOULON	1					
57	92990–12200	WASHER, PLAIN RONDELLE, PLATE	1					
58	90206–12M22	WASHER, WAVE RONDELLE, ONDULEE	1					
59	90387–12M02	COLLAR COLLERETTE	1					
60	90201–12035	WASHER, PLATE RONDELLE, PLATE	2					
61	90386–12003	BUSH DOUILLE	2					
62	92990–12600	WASHER, PLATE RONDELLE, PLATE	1					
63	90185–12M12	NUT, SELF-LOCKING ECROU,AUTO-BLOQUANT	1					
64	6X4–42728–10	CAP CAPUCHON	1					

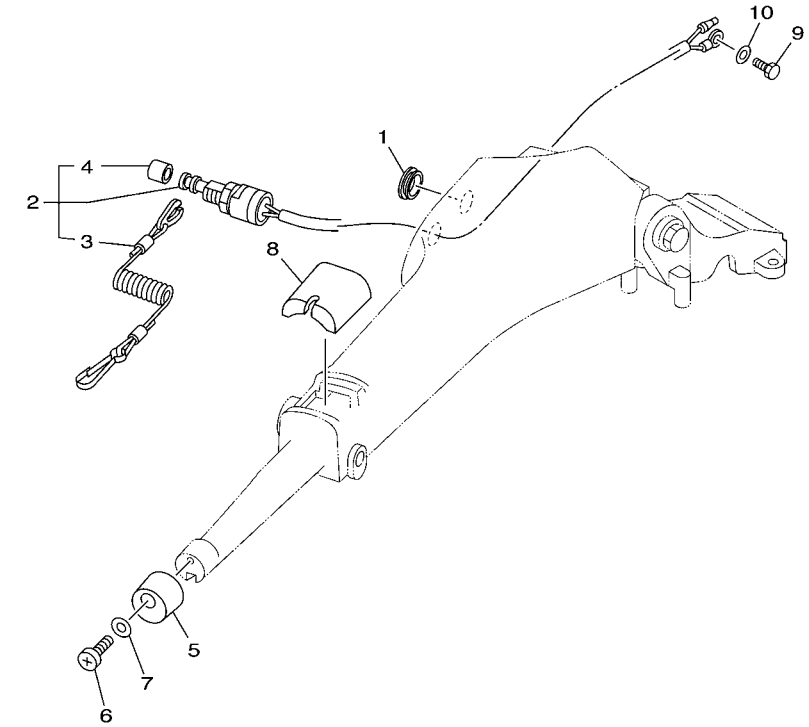

67C7300-G180

FIG. 18 STEERING 2 DIRECTION 2

REF. NO.	PART NO. N° PIECES	DESCRIPTION DESCRIPTION	MHD	ED	ET			REMARKS REMARQUES
1	676–42726–00	GROMMET PASSE-FIL	1					
2	6K5–82575–03	ENGINE STOP SWITCH ASSY COUPE CIRCUIT CPLT	1					
3	682–82556–00	.LANYARD, STOP SWITCH .PLAQUETTE	1					
4	689–8257Y–00	.CAP .CHAPEAU	1					
5	6X4–42728–00	CAP CAPUCHON	1					
6	97880–06016	SCREW, PAN HEAD VIS, TETE TRONCONIQUE	1					
7	92990–06600	WASHER, PLATE RONDELLE, PLATE	1					
8	6X4–81942–00	COVER COUVERCLE	1					
9	97095–06012	BOLT BOULON	1					
10	92995–06600	WASHER RONDELLE	1					

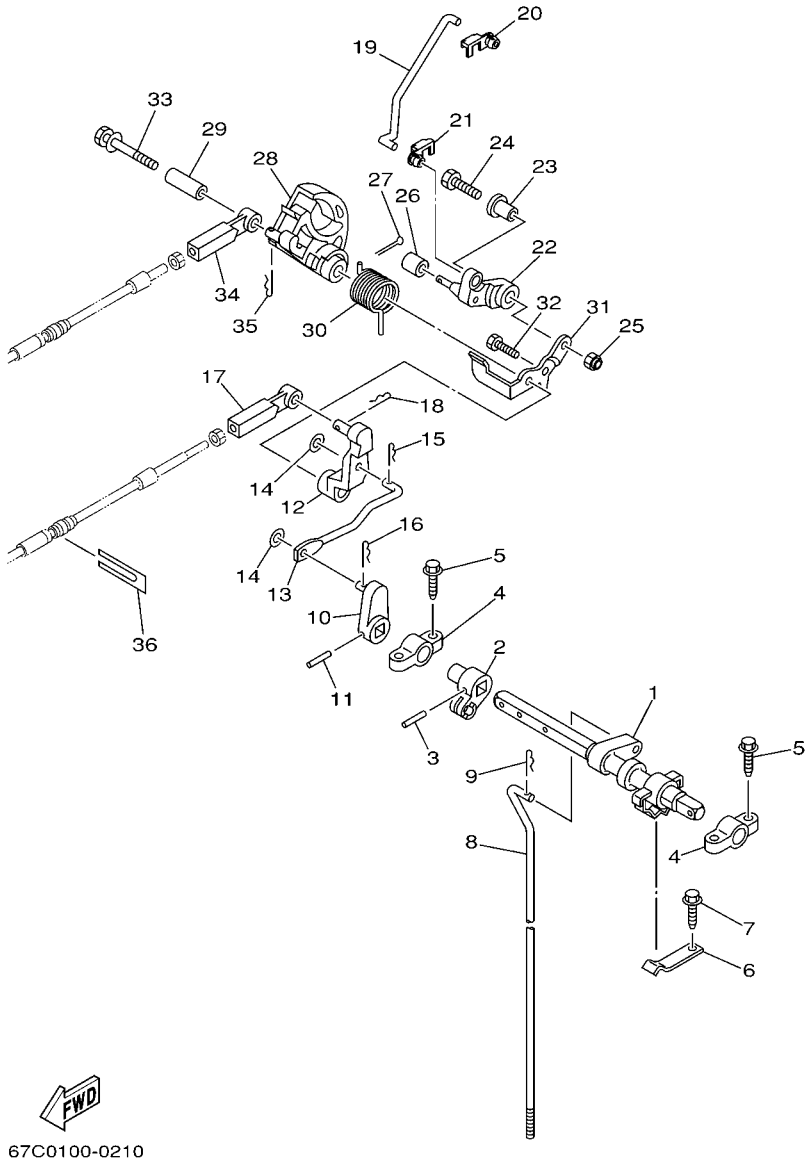

67C0100-0210

FIG. 19 CONTROL COMMANDE

REF. NO.	PART NO. N° PIECES	DESCRIPTION DESCRIPTION	MHD	ED	ET			REMARKS REMARQUES
1	67C–44121–00	LEVER, SHIFT ROD LEVIER, TIGE D'INVERSION	1	1	1			
2	66M–44122–00	BUSHING, SHIFT ROD LEVER DOUILLE, LEVIER D'EMBRAYAGE	1	1	1			
3	90254–03M05	PIN, SPRING RIVET, TETE TRONCONIQUE	1	1	1			
4	6F5–41662–00	BRACKET 2 SUPPORT 2	2	2	2			
5	90109–06M81	BOLT BOULON	4	4	4			
6	67C–44116–00	SPRING RESSORT	1	1	1			
7	90109–06M86	BOLT BOULON	1	1	1			
8	67C–44143–00	ROD, SHIFT TIGE D'EMBRAYAGE	1		1			S(16.1") S(16.1")
	67C–44143–10	ROD, SHIFT TIGE D'EMBRAYAGE	1	1	1			L(21.0") L(21.0")
9	90468–18008	CLIP JONC	1	1	1			
10	65W–44142–00	JOINT AXE	1	1	1			
11	90254–03M05	PIN, SPRING RIVET, TETE TRONCONIQUE	1	1	1			
12	67C–44125–00	LEVER, SHIFT ROD LEVIER, TIGE D'INVERSION	1	1	1			
13	67C–44192–00	LINK, SHIFT ROD BIELLETTE	1	1	1			
14	90201–05M06	WASHER, PLATE RONDELLE, PLATE	2	2	2			
15	90468–10005	CLIP JONC	1	1	1			
16	90468–18008	CLIP JONC	1	1	1			
17	67C–48344–00	CABLE END, REMOTE CONTROL CHAPE CABLE	1	1	1			
18	90468–18008	CLIP JONC	1	1	1			
19	67C–41241–00	ROD, LINK BIELLETTE	1	1	1			
20	6E9–41237–00	JOINT, LINK RACCORD	1	1	1			
21	6F5–41237–00	JOINT, LINK RACCORD	1	1	1			
22	67C–41212–00	ARM, ACCEL. BRAS	1	1	1			
23	90387–06M29	COLLAR COLLERETTE	1	1	1			
24	97095–06025	BOLT BOULON	1	1	1			
25	95780–06300	NUT, FLANGE ECROU	1	1	1			
26	62Y–42171–00	BUSHING COUSSINET	1	1	1			

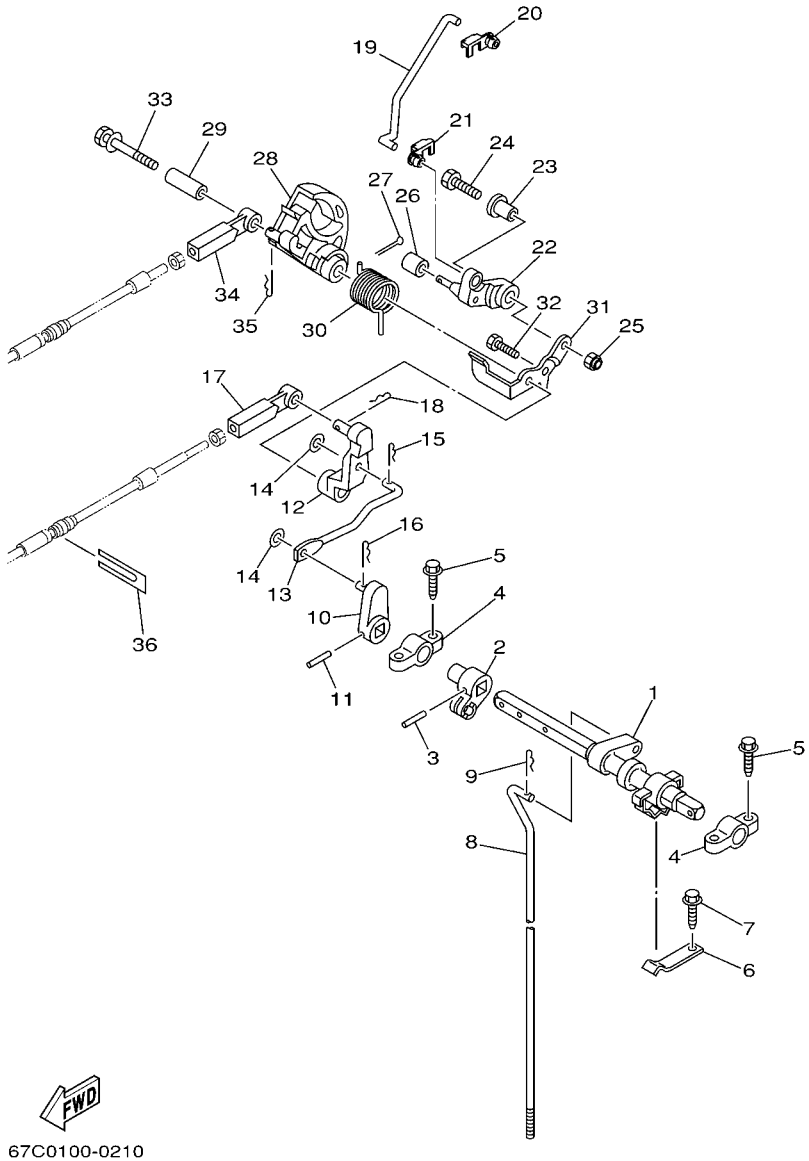

FIG. 19 CONTROL COMMANDE

REF. NO.	PART NO. N° PIECES	DESCRIPTION DESCRIPTION	MHD	ED	ET			REMARKS REMARQUES
27	91490–12010	PIN. COTTER GOUPILLE	1	1	1			
28	67C–41213–20	CAM, ACCEL. CAME, ACCELERATION	1	1	1			
29	90387–06M88	COLLAR COLLERETTE	1	1	1			
30	90508–20M44	SPRING, TORSION RESSORT, TORSION	1	1	1			
31	67C–44117–00	BRACKET SUPPORT	1	1	1			
32	97095–06014	BOLT BOULON	1	1	1			
33	90119–06M91	BOLT, WITH WASHER BOULON, AVEC RONDELLE	1	1	1			
34	67C–48344–10	CABLE END, REMOTE CONTROL CHAPE CABLE	1	1	1			
35	90468–18008	CLIP JONC	1	1	1			
36	62Y–48538–00	CLAMP, CABLE 1 COLLIER	1	1	1			

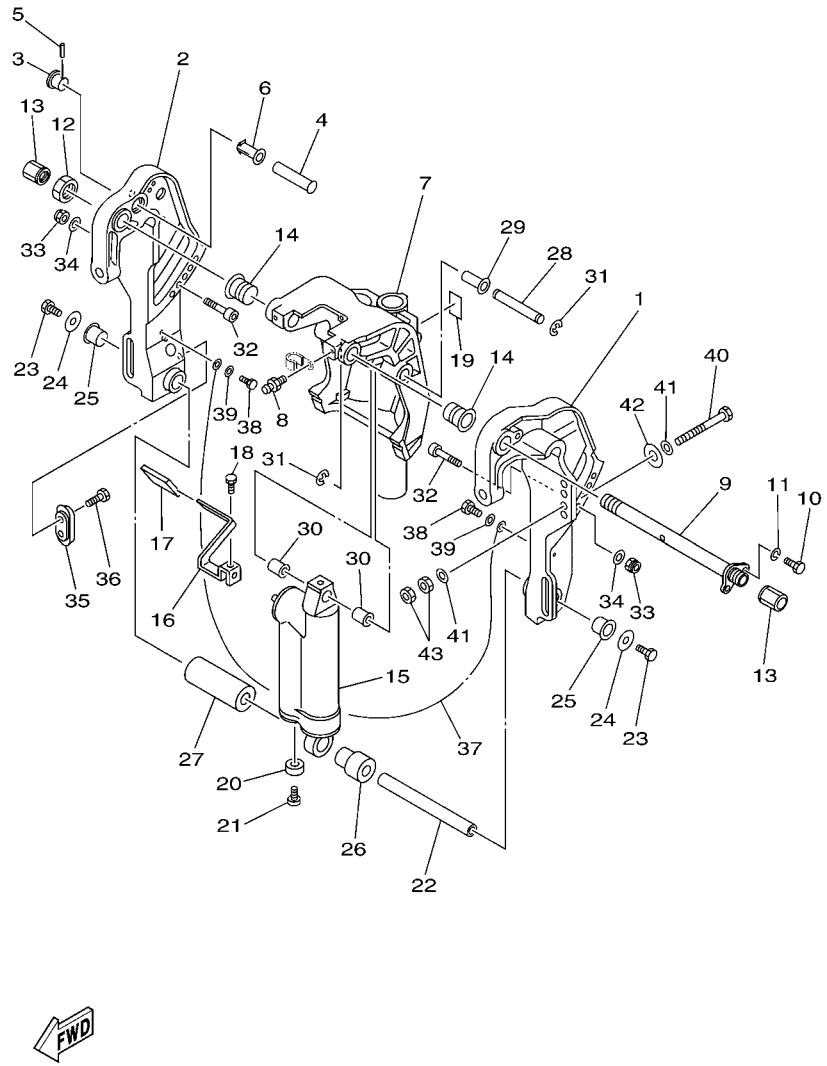

FIG. 20 BRACKET 1 SUPPORT 1

REF. NO.	PART NO. N° PIECES	DESCRIPTION DESCRIPTION	MHD	ED	ET			REMARKS REMARQUES
1	67C–43111–10–4D	BRACKET, CLAMP 1 PRESSE 1	1	1				
2	67C–43112–10–4D	BRACKET, CLAMP 2 PRESSE 2	1	1				
3	65W–43192–00	KNOB, STOPPER BOUTON, BUTEE DE RELEVAGE	1	1				
4	65W–43191–00	SHAFT, STOPPER AXE, BUTEE	1	1				
5	91690–30018	PIN, SPRING AGRAFFE	1	1				
6	90386–14MA1	BUSH DOUILLE	1	1				
7	67C–43311–00–4D	BRACKET, SWIVEL 1 SUPPORT, PIVOT 1	1					S(16.1") S(16.1")
	67C–43311–10–4D	BRACKET, SWIVEL 1 SUPPORT, PIVOT 1	1	1				L(21.0") L(21.0")
8	93700–06M03	NIPPLE, GREASE PION	3	3				
9	6K9–43131–01	BOLT, CLAMP BRACKET BOULON, PRESSE	1	1				
10	97095–08020	BOLT BOULON	1	1				
11	92995–08100	WASHER RONDELLE	1	1				
12	90185–22M11	NUT, SELF-LOCKING ECROU,AUTO-BLOQUANT	1	1				
13	6G5–43145–01	CAP, CLAMP BRACKET CAPUCHON, PRESSE	2	2				
14	90386–22MA4	BUSH DOUILLE	2	2				
15	67C–43107–00–4D	SHOCK ABSORBER SUB-ASSY AMORTISSEUR (ENS.)	1					S(16.1") S(16.1")
	67C–43107–10–4D	SHOCK ABSORBER SUB-ASSY AMORTISSEUR (ENS.)	1	1				L(21.0") L(21.0")
16	67C–43631–00	LEVER, TILT LEVIER, INCLINAISON	1	1				
17	682–43318–01	COVER CAPUCHON	1	1				
18	97095–06010	BOLT BOULON	1	1				
19	63D–43691–00	INDICATOR, TILT ETIQUETTE, RELEVAGE	1	1				
20	663–45251–00	ANODE ANODE	1	1				
21	98680–06525	SCREW, OVAL HEAD VIS, TETE FRAISEE BOMBEE	1	1				
22	90249–18M35	PIN GOUPILLE	1	1				
23	97080–08016	BOLT BOULON	2	2				
24	90201–08M00	WASHER, PLATE RONDELLE, PLATE	2	2				
25	90386–18M44	BUSH DOUILLE	2	2				

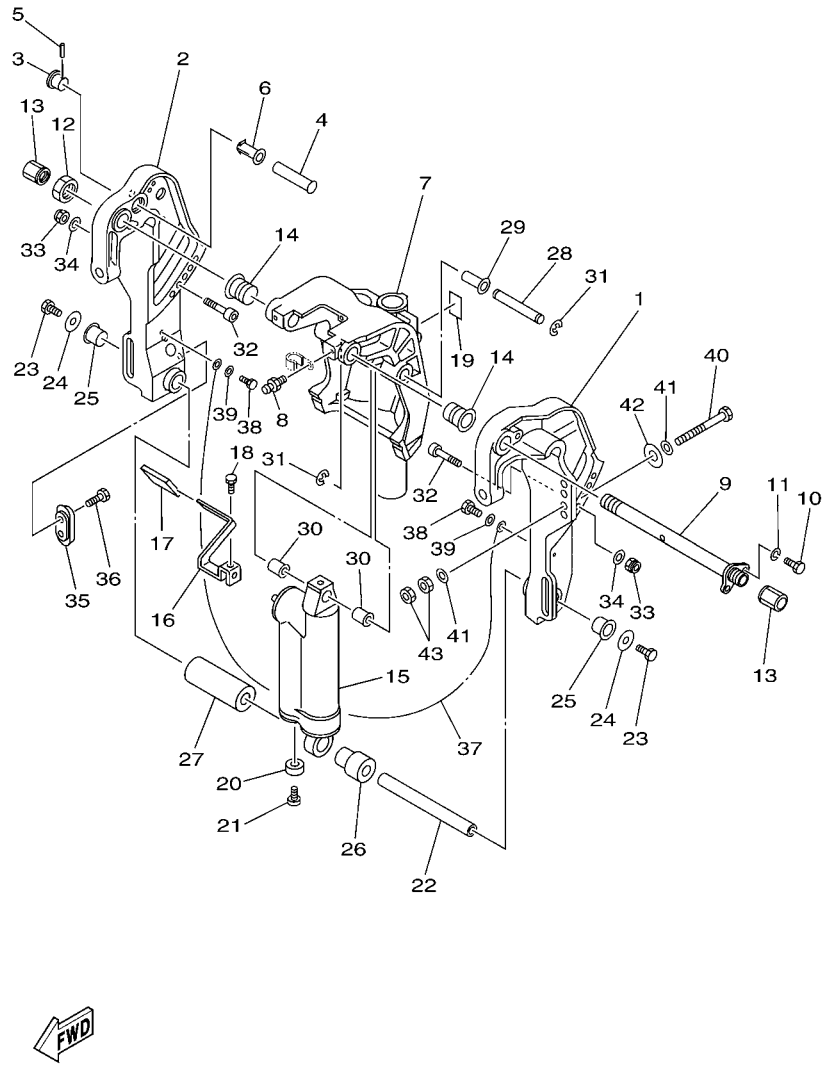

FIG. 20 BRACKET 1 SUPPORT 1

REF. NO.	PART NO. N° PIECES	DESCRIPTION DESCRIPTION	MHD	ED	ET			REMARKS REMARQUES
26	90386–18MA5	BUSH DOUILLE	1	1				
27	90387–18M03	COLLAR COLLERETTE	1	1				
28	90249–12M38	PIN GOUPILLE	1	1				
29	90381–12M10	BUSH, SOLID DOUILLE, SOLIDE	1	1				
30	90381–12M11	BUSH, SOLID DOUILLE, SOLIDE	2	2				
31	99080–10600	CIRCLIP CIRCLIP	2	2				
32	90110–10M02	BOLT, HEXAGON SOCKET HEAD BOULON, TETE HEXAGONALE CREUSE	2	2				
33	90185–10M13	NUT, SELF-LOCKING ECROU,AUTO-BLOQUANT	2	2				
34	92995–10600	WASHER RONDELLE	2	2				
35	65W–45251–00	ANODE ANODE	1	1				
36	90101–06020	BOLT BOULON	2	2				
37	67C–82127–20	WIRE, LEAD 2 FIL 2	1	1				
38	97095–06014	BOLT BOULON	2	2				
39	92995–06600	WASHER RONDELLE	2	2				
40	90101–12M65	BOLT BOULON	4	4				
41	92995–12200	WASHER RONDELLE	8	8				
42	90201–12426	WASHER, PLATE RONDELLE, PLATE	4	4				
43	95380–12600	NUT ECROU	8	8				

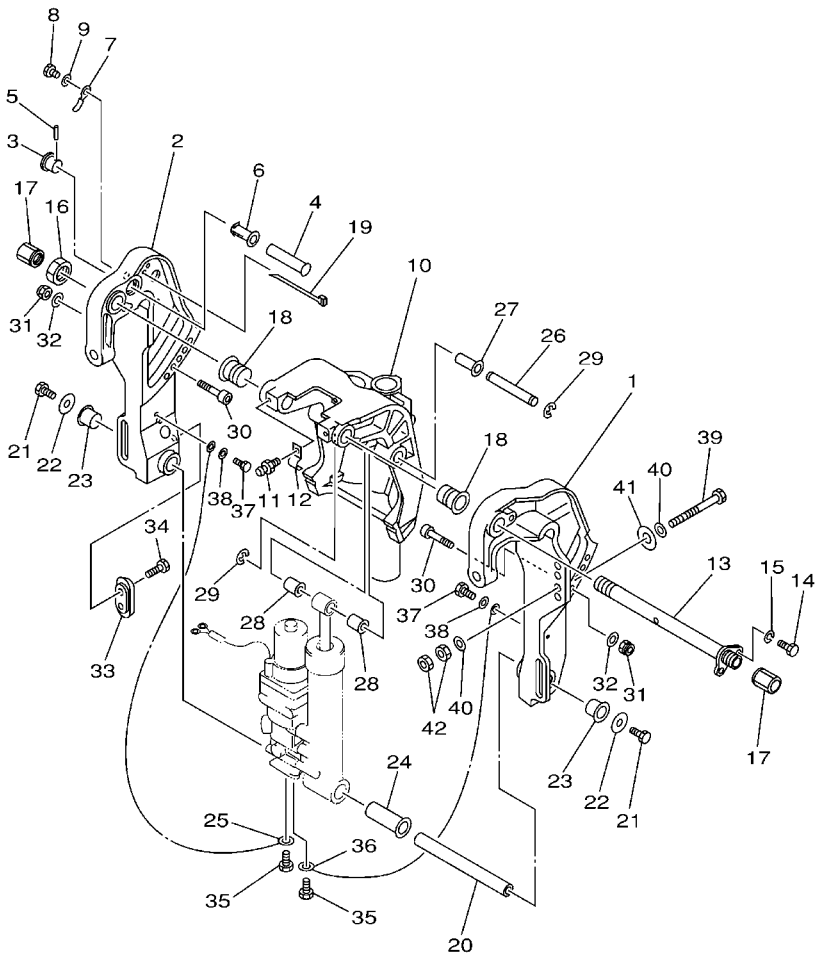

67C0010-1231

FIG. 21 BRACKET 2 SUPPORT 2

REF. NO.	PART NO. N° PIECES	DESCRIPTION DESCRIPTION	MHD	ED	ET			REMARKS REMARQUES
1	67C–43111–10–4D	BRACKET, CLAMP 1 PRESSE 1			1			
2	67C–43112–10–4D	BRACKET, CLAMP 2 PRESSE 2			1			
3	65W–43192–00	KNOB, STOPPER BOUTON, BUTEE DE RELEVAGE			1			
4	65W–43191–00	SHAFT, STOPPER AXE, BUTEE			1			
5	91690–30018	PIN, SPRING AGRAFFE			1			
6	90386–14MA1	BUSH DOUILLE			1			
7	90465–10M77	CLAMP BRIDE			1			
8	97095–06014	BOLT BOULON			1			
9	92995–06600	WASHER RONDELLE			1			
10	67C–43311–00–4D	BRACKET, SWIVEL 1 SUPPORT, PIVOT 1			1			S(16.1") S(16.1")
	67C–43311–10–4D	BRACKET, SWIVEL 1 SUPPORT, PIVOT 1			1			L(21.0") L(21.0")
11	93700–06M03	NIPPLE, GREASE PION			3			
12	90465–08M63	CLAMP BRIDE			1			
13	6K9–43131–01	BOLT, CLAMP BRACKET BOULON, PRESSE			1			
14	97095–08020	BOLT BOULON			1			
15	92995–08100	WASHER RONDELLE			1			
16	90185–22M11	NUT, SELF-LOCKING ECROU,AUTO-BLOQUANT			1			
17	6G5–43145–01	CAP, CLAMP BRACKET CAPUCHON, PRESSE			2			
18	90386–22MA4	BUSH DOUILLE			2			
19	90465–13M11	CLAMP BRIDE			2			
20	90249–18M35	PIN GOUPILLE			1			
21	97080–08016	BOLT BOULON			2			
22	90201–08M00	WASHER, PLATE RONDELLE, PLATE			2			
23	90386–18M44	BUSH DOUILLE			2			
24	90386–18MA0	BUSH DOUILLE			1			
25	6H1–82148–00	WIRE, LEAD 4 FIL 4			1			
26	90249–12M38	PIN GOUPILLE			1			

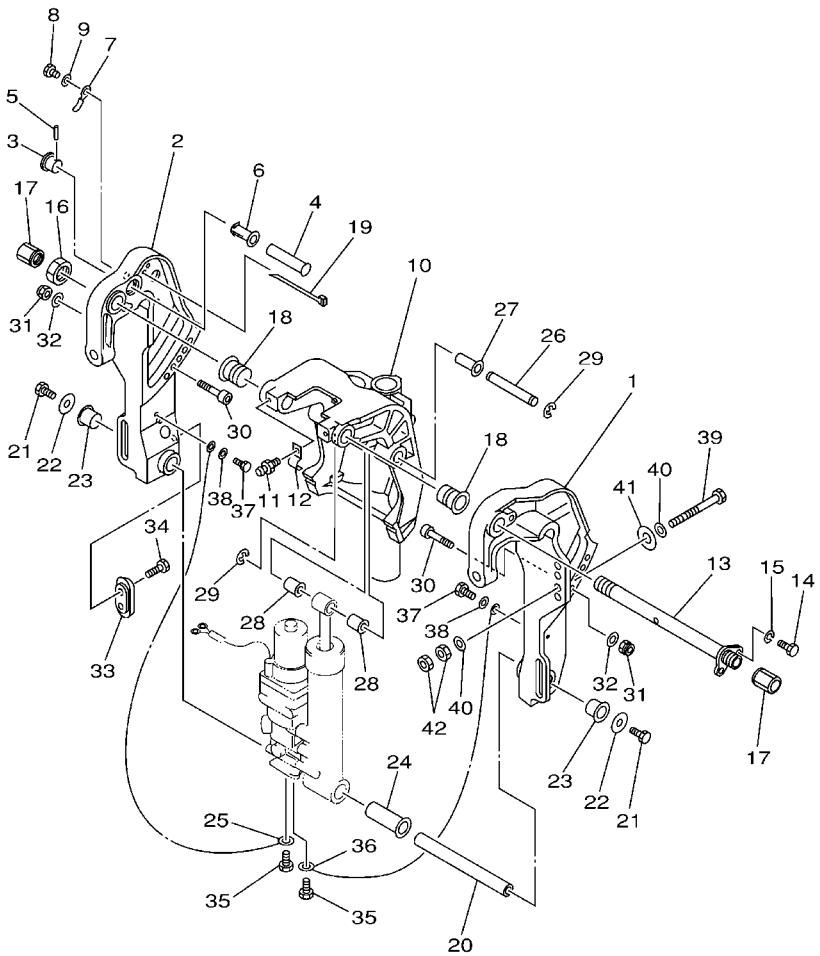

67C0010-1231

FIG. 21 BRACKET 2 SUPPORT 2

REF. NO.	PART NO. N° PIECES	DESCRIPTION DESCRIPTION	MHD	ED	ET			REMARKS REMARQUES
27	90381–12M10	BUSH, SOLID DOUILLE, SOLIDE			1			
28	90381–12M11	BUSH, SOLID DOUILLE, SOLIDE			2			
29	99080–10600	CIRCLIP CIRCLIP			2			
30	90110–10M02	BOLT, HEXAGON SOCKET HEAD BOULON, TETE HEXAGONALE CREUSE			2			
31	90185–10M13	NUT, SELF-LOCKING ECROU,AUTO-BLOQUANT			2			
32	92995–10600	WASHER RONDELLE			2			
33	65W–45251–00	ANODE ANODE			1			
34	90101–06020	BOLT BOULON			2			
35	97085–06010	BOLT BOULON			2			
36	6U0–82127–00	WIRE, LEAD 2 FIL 2			1			
37	97095–06014	BOLT BOULON			2			
38	92995–06600	WASHER RONDELLE			2			
39	90101–12M65	BOLT BOULON			4			
40	92995–12200	WASHER RONDELLE			8			
41	90201–12426	WASHER, PLATE RONDELLE, PLATE			4			
42	95380–12600	NUT ECROU			8			

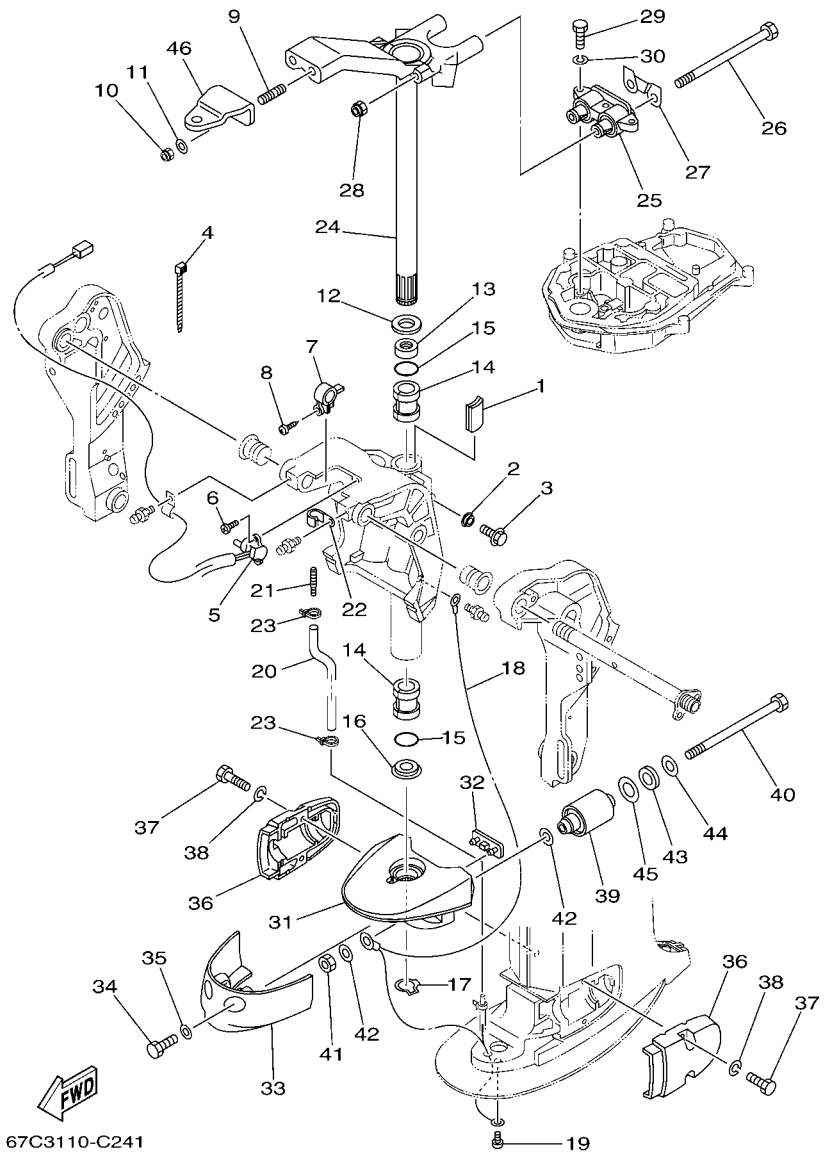

FIG. 22 BRACKET 3 SUPPORT 3

REF. NO.	PART NO. N° PIECES	DESCRIPTION DESCRIPTION	MHD	ED	ET			REMARKS REMARQUES
1	6J8–42528–00	PLATE, FRICTION PLAQUE, FRICTION	1	1	1			
2	689–43373–01	SEAL, DAMPER JOINT	1	1	1			
3	90105–06M18	BOLT, FLANGE BOULON	1	1	1			
4	90465–11M10	CLAMP BRIDE			4			
5	67H–83672–00	TRIM SENDER INCLINER RACCORD			1			
6	97885–06016	SCREW, PAN HEAD VIS, A ENCOCHE			2			
7	6K9–43139–01	CAM, TRIM SENDER VILEBREQUIN TRUM			1			
8	97780–60525	SCREW, TAPPING VIS, TETE BOMBEE			1			
9	90116–10M28	BOLT, STUD GOUJON	2	2	2			
10	90185–10051	NUT, SELF-LOCKING ECROU,AUTO-BLOQUANT	2	2	2			
11	90201–10120	WASHER, PLATE RONDELLE, PLATE	2	2	2			
12	90201–30M00	WASHER, PLATE RONDELLE, PLATE	1	1	1			
13	90386–30M78	BUSH DOUILLE	1	1	1			
14	90386–30M77	BUSH DOUILLE	2	2	2			
15	93210–29M94	O-RING JOINT TORIQUE	2	2	2			
16	90386–30M60	BUSH DOUILLE	1	1	1			
17	93410–28M06	CIRCLIP CLIPS	1	1	1			
18	67C–82127–00	WIRE, LEAD 2 FIL 2	1		1			S(16.1") S(16.1")
	67C–82127–10	WIRE, LEAD 2 FIL 2	1	1	1			L(21.0") L(21.0")
19	97885–06008	SCREW, PAN HEAD VIS, A ENCOCHE	1	1	1			
20	90445–07MF1	HOSE (L570) DURITE (L570)	1		1			S(16.1") S(16.1")
	90445–07M53	HOSE (L700) DURITE (L700)	1	1	1			L(21.0") L(21.0")
21	6E5–83558–00	END, NIPPLE RACCORD DE NIPPLE	1	1	1			
22	90465–08M07	CLAMP BRIDE	1	1	1			
23	90465–11M10	CLAMP BRIDE	2	2	2			
24	67C–42510–01–4D	STEERING BRACKET ASSY DIRECTION SUPPORT (ENS.)	1		1			S(16.1") S(16.1")
	67C–42510–11–4D	STEERING BRACKET ASSY DIRECTION SUPPORT (ENS.)	1	1	1			L(21.0") L(21.0")

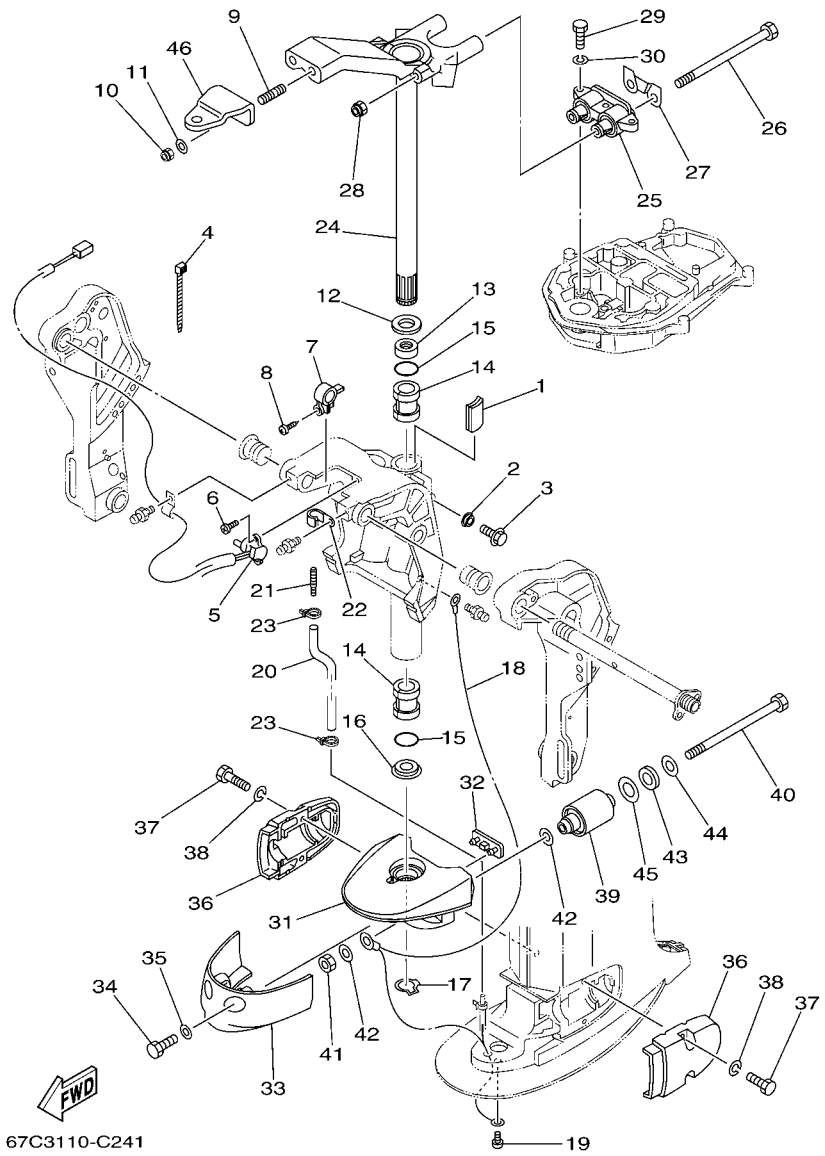

FIG. 22 BRACKET 3 SUPPORT 3

REF. NO.	PART NO. N° PIECES	DESCRIPTION DESCRIPTION	MHD	ED	ET			REMARKS REMARQUES
25	67C–44514–00–4D	MOUNT DAMPER, UPPER SIDE SILENT-BLOC, SUPERIEUR LATERAL	1		1			S(16.1") S(16.1")
	67C–44514–10–4D	MOUNT DAMPER, UPPER SIDE SILENT-BLOC, SUPERIEUR LATERAL	1	1	1			L(21.0") L(21.0")
26	90101–08M15	BOLT BOULON	2	2	2			
27	66T–44526–30	PLATE PLAQUE	1	1	1			
28	90185–08045	NUT, SELF-LOCKING ECROU,AUTO-BLOQUANT	2	2	2			
29	97075–08030	BOLT BOULON	3	3	3			
30	92995–08100	WASHER RONDELLE	3	3	3			
31	67C–44551–01–4D	HOUSING, LOWER MOUNT RUBBER BOITIER, SILENT-BLOC INFERIEUR	1		1			S(16.1") S(16.1")
	67C–44551–10–4D	HOUSING, LOWER MOUNT RUBBER BOITIER, SILENT-BLOC INFERIEUR	1	1	1			L(21.0") L(21.0")
32	67C–44575–00	DAMPER, LOWER MOUNT RUBBER SILENT-BLOC, INFERIEUR	1	1	1			
33	67C–44553–00–4D	COVER, LOWER MOUNT COUVERCLE, SUSPENSION INFERIEU	1	1	1			L(21.0") L(21.0")
34	97095–08020	BOLT BOULON	2	2	2			L(21.0") L(21.0")
35	92995–08600	WASHER RONDELLE	2	2	2			L(21.0") L(21.0")
36	67C–44552–01–4D	HOUSING, LOWER MOUNT RUBBER BOITIER, SILENT-BLOC INFERIEUR	2	2	2			
37	97075–08030	BOLT BOULON	4	4	4			
38	92995–08100	WASHER RONDELLE	4	4	4			
39	67C–44555–21–94	MOUNT DAMPER, LOWER SIDE SILENT-BLOC, INFERIEUR LATERAL	2		2			S(16.1") S(16.1")
	67C–44555–11–94	MOUNT DAMPER, LOWER SIDE SILENT-BLOC, INFERIEUR LATERAL	2	2	2			L(21.0") L(21.0")
40	90109–12MA3	BOLT BOULON	2	2	2			
41	95380–12700	NUT ECROU	2	2	2			
42	90201–12M16	WASHER, PLATE RONDELLE, PLATE	4	4	4			
43	90202–21100	WASHER, PLATE RONDELLE, PLATE	2	2	2			
44	90201–13M19	WASHER, PLATE RONDELLE, PLATE	2	2	2			
45	90201–22M05	WASHER, PLATE RONDELLE, PLATE	2	2	2			
46	65W–48511–00	HOOK, STEERING ATTACHE, DIRECTION		1	1			

FIG. 23 POWER TRIM & TILT ASSY PUISSANCE PARER ET INCLINER

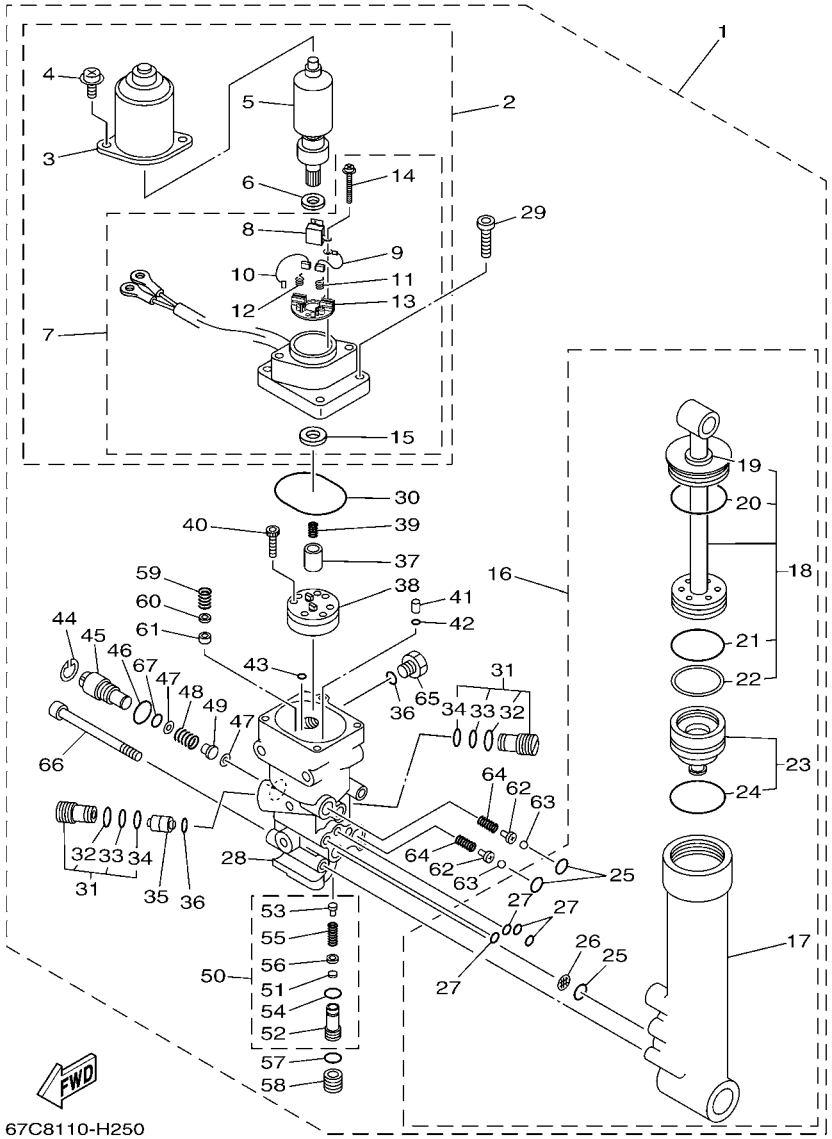

REF. NO.	PART NO. N° PIECES	DESCRIPTION DESCRIPTION	MHD	ED	ET			REMARKS REMARQUES
1	67C–43800–01–4D	POWER TRIM & TILT ASSY PUISSANCE PARER ET INCLINER (E			1			
2	67C–43880–01	.MOTOR ASSY .MOTEUR (ENS.)			1			
3	65W–43804–01	..STATOR ASSY ..STATOR (ENS.)			1			
4	65W–43887–01	..BOLT ..BOULON			2			
5	65W–43805–01	..ARMATURE ASSY ..INDUIT (ENS.)			1			
6	65W–4387G–00	..WASHER ..RONDELLE			1			
7	67C–43881–01	..FRAME, END ..BATI			1			
8	65W–82181–00	...CIRCUIT BREAKER COMP. ...RUPTEUR COMPLET			1			
9	65W–43892–01	...BRUSH 2 ...BALAI 2			1			
10	65W–43891–01	...BRUSH 1 ...BALAI 1			1			
11	65W–4386K–01	...SPRING, BRUSH ...RESSORT, BALAI			1			
12	65W–4386L–00	...SPRING, BRUSH 2 ...RESSORT, BALAI 2			1			
13	65W–4380F–01	...PLATE, BRUSH HOLDER ...PLAQUE			1			
14	65W–43879–01	...SCREW, WITH WASHER ...VIS, AVEC RONDELLE			2			
15	65W–43882–01	...OIL SEAL ...JOINT SPI			1			
16	67C–43840–00	.POWER TILT ASSY .PUISSANCE INCLINER (ENS.)			1			
17	65W–4380K–00	..CYLINDER, TILT SUB ASSY ..CYLINDRE			1			
18	67C–43810–00	..TILT PISTON SUB ASSY ..INCLINER PISTON AUXILIAIRE(ENS			1			
19	65W–43812–00	...SEAL, DUST ...JOINT			1			
20	65W–43865–00	...O-RING ...JOINT TORIQUE			1			
21	6H1–43861–10	...O-RING ...JOINT TORIQUE			1			
22	65W–43871–00	...RING, BACK UP ...SEGMENT			1			
23	65W–4381B–00	..FREE PISTON SUB ASSY ..PISTON AUXILIAIRE (ENS.)			1			
24	6H1–43861–10	...O-RING ...JOINT TORIQUE			1			
25	93210–11368	..O-RING ..JOINT TORIQUE			3			
26	6H1–43816–00	..FILTER 1 ..FILTRE 1			1			
27	93210–064A5	..O-RING ..JOINT TORIQUE			4			

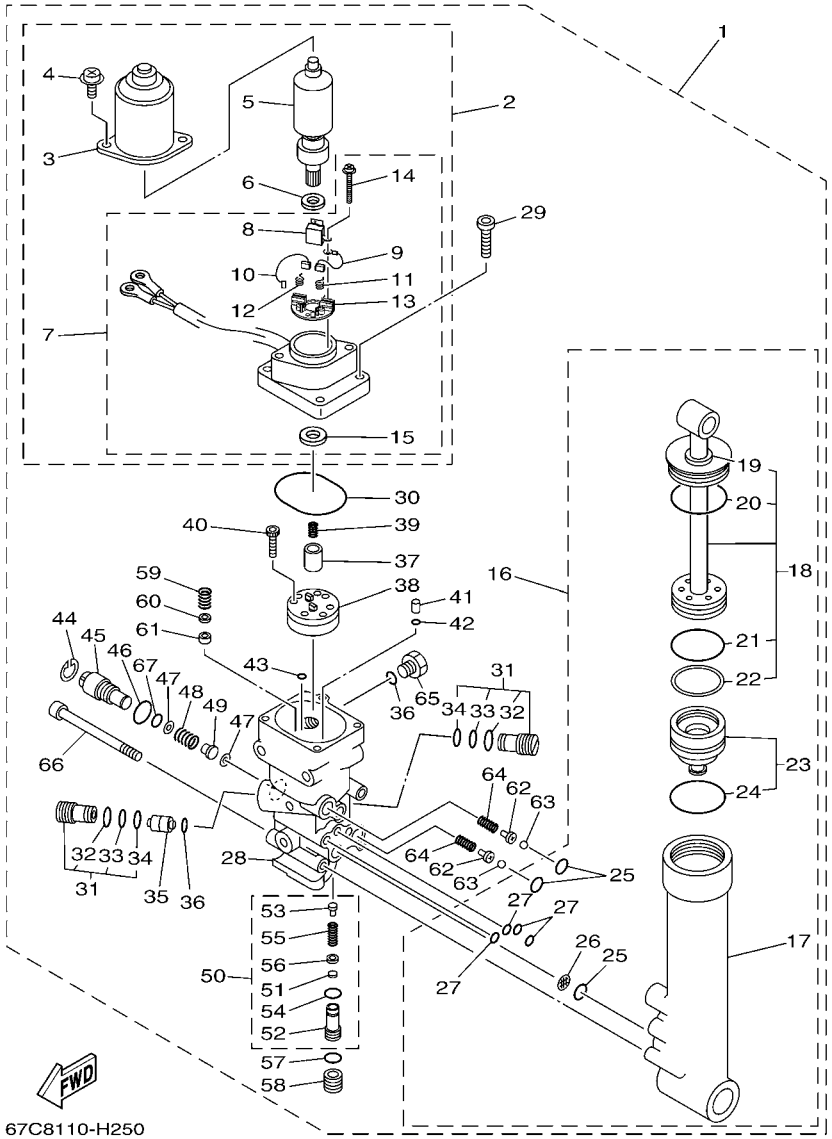

FIG. 23 POWER TRIM & TILT ASSY PUISSANCE PARER ET INCLINER

REF. NO.	PART NO. N° PIECES	DESCRIPTION DESCRIPTION	MHD	ED	ET			REMARKS REMARQUES
28	67C–4380L–00	.HOUSING, TRIM & TILT SUB ASSY .CARTER			1			
29	65W–43888–00	.BOLT, SOCKET .BOULON			4			
30	93210–50768	.O-RING .JOINT TORIQUE			1			
31	6T4–43802–03	.VALVE SUB ASSY .CLAPET AUXILIAIRE (ENS.)			2			
32	6H1–43866–00	..O-RING ..JOINT TORIQUE			1			
33	93210–10M74	..O-RING ..JOINT TORIQUE			1			
34	93210–12N52	..O-RING ..JOINT TORIQUE			1			
35	62X–43841–00	.PISTON, SHUTTLE .PISTON			1			
36	93210–09165	.O-RING .JOINT TORIQUE			2			
37	65W–43831–00	.CONNECTOR, SHAFT .RACCORD			1			
38	65W–43830–00	.GEAR PUMP ASSY .POMPE A PIGNON (ENS.)			1			
39	6T4–43853–00	.SPRING, MAIN VALVE .RESSORT			1			
40	91318–04025	.BOLT .BOULON			4			
41	65W–43817–00	.FILTER 2 .FILTRE 2			2			
42	93210–04N50	.O-RING .JOINT TORIQUE			2			
43	93210–04N51	.O-RING .JOINT TORIQUE			2			
44	6H1–43875–00	.RING, SNAP .RESSORT			1			
45	6H1–43845–00	.SCREW, MANUAL RELEASE .VIS			1			
46	93210–18397	.O-RING .JOINT TORIQUE			1			
47	6H1–43847–00	.SEAT, MANUAL VALVE .SIEGE			2			
48	65W–43854–00	.SPRING, MANUAL RELEASE .RESSORT			1			
49	65W–4382A–00	.ADAPTOR 1 .ADAPTEUR 1			1			
50	CS2–43803–81	.CASE VALVE COMP. .CARTER VALVE COMP.			1			
51	6H1–4384G–11	..SEAL, RELIEF VALVE ..JOINT			1			
52	67C–43851–00	..SEAT, RELIEF VALVE ..SIEGE			1			
53	67F–43843–00	..SCREW, VALVE LOCK ..VIS			1			
54	93210–10M74	..O-RING ..JOINT TORIQUE			1			

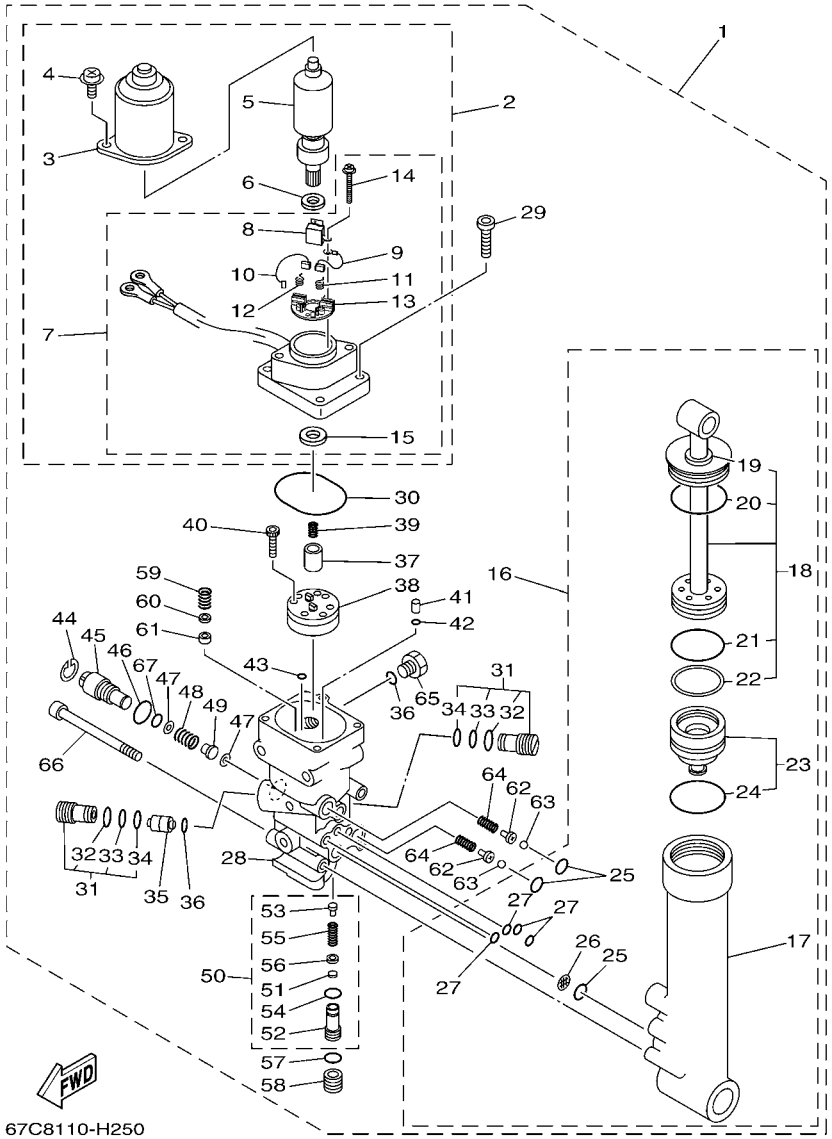

FIG. 23 POWER TRIM & TILT ASSY PUISSANCE PARER ET INCLINER

REF. NO.	PART NO. N° PIECES	DESCRIPTION DESCRIPTION	MHD	ED	ET			REMARKS REMARQUES
55	6H1–43856–10	..SPRING, DOWN RELIEF ..RESSORT			1			
56	6H1–43844–10	..PIN, VALVE SUPPORT ..GOUPILLE			1			
57	93210–11073	.O-RING .JOINT TORIQUE			1			
58	65W–43843–00	.SCREW, VALVE LOCK .VIS			1			
59	6H1–43856–10	.SPRING, DOWN RELIEF .RESSORT			1			
60	6H1–43844–10	.PIN, VALVE SUPPORT .GOUPILLE			1			
61	6H1–4384F–10	.SEAL, MAIN VALVE .JOINT			1			
62	65W–4386A–00	.PIN, ABSORBER VALVE .GOUPILLE, SOUPAPE			2			
63	93501–08001	.BALL .BILLE			2			
64	65W–43853–00	.SPRING, MAIN VALVE .RESSORT			2			
65	6H1–43829–00	.PLUG, RESERVOIR .BOUCHON			1			
66	62X–43878–00	.BOLT, SOCKET .BOULON			3			
67	93210–10M74	.O-RING .JOINT TORIQUE			1			

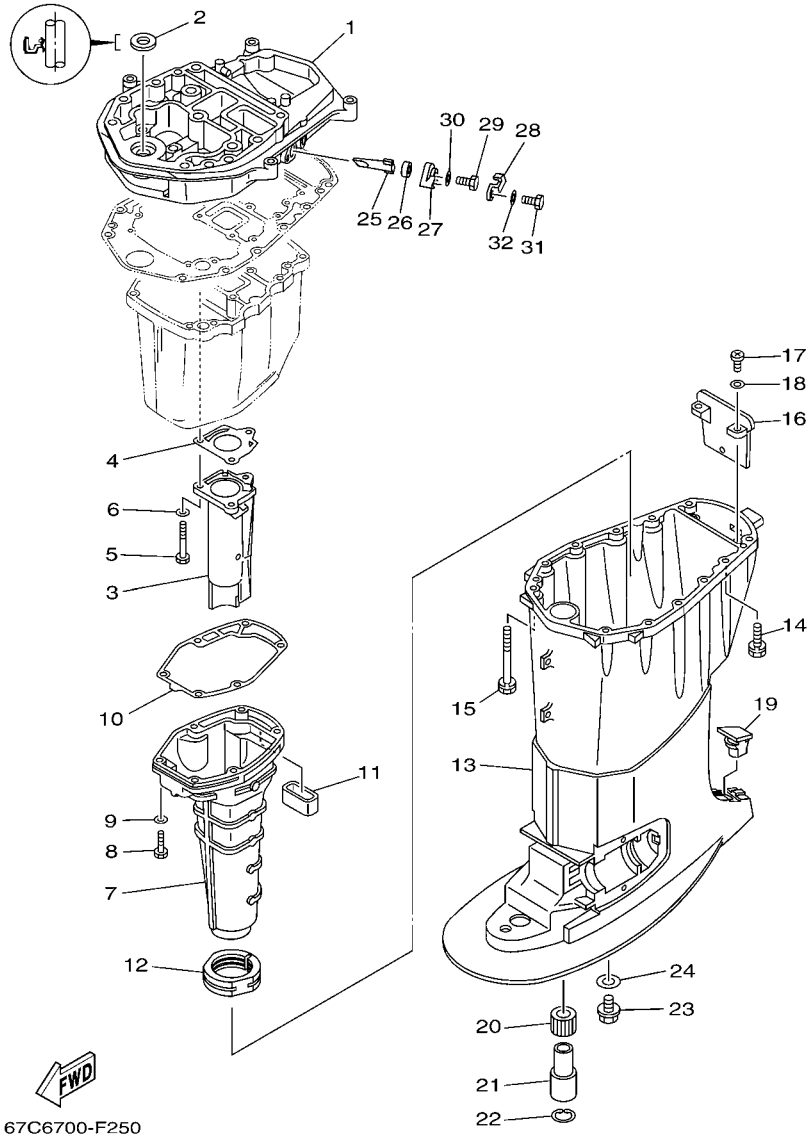

FIG. 24 UPPER CASING FOURREAU

REF. NO.	PART NO. N° PIECES	DESCRIPTION DESCRIPTION	MHD	ED	ET			REMARKS REMARQUES
1	67C–41137–12–94	GUIDE, EXHAUST COLLECTEUR D'ECHAPPEMENT	1	1	1			
2	93110–16004	OIL SEAL JOINT SPY	1	1	1			
3	67C–41131–00–5B	MANIFOLD, EXT. 1 PIPE D'ECHAPPEMENT	1	1	1			
4	67C–41133–00	GASKET, EXHAUST MANIFOLD 1 JOINT, PIPE D'ECHAPPEMENT	1	1	1			
5	97075–06050	BOLT BOULON	3	3	3			
6	92995–06600	WASHER RONDELLE	3	3	3			
7	67C–14711–01–5B	MUFFLER 1 POT D'ECHAPPEMENT 1	1		1			S(16.1") S(16.1")
	67C–14711–12–5B	MUFFLER 1 POT D'ECHAPPEMENT 1	1	1	1			L(21.0") L(21.0")
8	97075–06025	BOLT BOULON	6	6	6			
9	92995–06600	WASHER RONDELLE	6	6	6			
10	62Y–41134–01	GASKET, EXHAUST MANIFOLD JOINT, PIPE D'ECHAPPEMENT	1	1	1			
11	62Y–45127–00	SEAL JOINT	1	1	1			
12	67C–45123–00	GASKET, MUFFLER JOINT, POT DE DETENTE	1	1	1			
13	67C–45111–00–4D	CASING, UPPER FOURREAU	1		1			S(16.1") S(16.1")
	67C–45111–21–4D	CASING, UPPER FOURREAU	1	1	1			L(21.0") L(21.0")
14	90119–08M79	BOLT, WITH WASHER BOULON, AVEC RONDELLE	4	4	4			
15	90119–08M82	BOLT, WITH WASHER BOULON, AVEC RONDELLE	8	8	8			
16	67C–45151–00	COVER, UPPER CASING CAPUCHON, FOURREAU	1	1	1			
17	97880–05016	SCREW, PAN HEAD VIS, TETE TRONCONIQUE	2	2	2			
18	92990–05600	WASHER, PLATE RONDELLE, PLATE	2	2	2			
19	63D–45155–00	CAP CAPUCHON	1		1			S(16.1") S(16.1")
	6C5–45155–00	CAP CAPUCHON	1	1	1			L(21.0") L(21.0")
20	679–45318–00	BUSHING, DRIVE SHAFT DOUILLE, ARBRE MOTEUR	1	1	1			L(21.0") L(21.0")
21	90387–23002	COLLAR COLLERETTE	1	1	1			L(21.0") L(21.0")
22	93420–36M01	CIRCLIP CIRCLIP, TYPE S	1	1	1			L(21.0") L(21.0")
23	90340–14M06	PLUG, STRAIGHT SCREW PLOT, FILETE DROIT	1	1	1			L(21.0") L(21.0")
24	90430–14M09	GASKET JOINT	1	1	1			L(21.0") L(21.0")

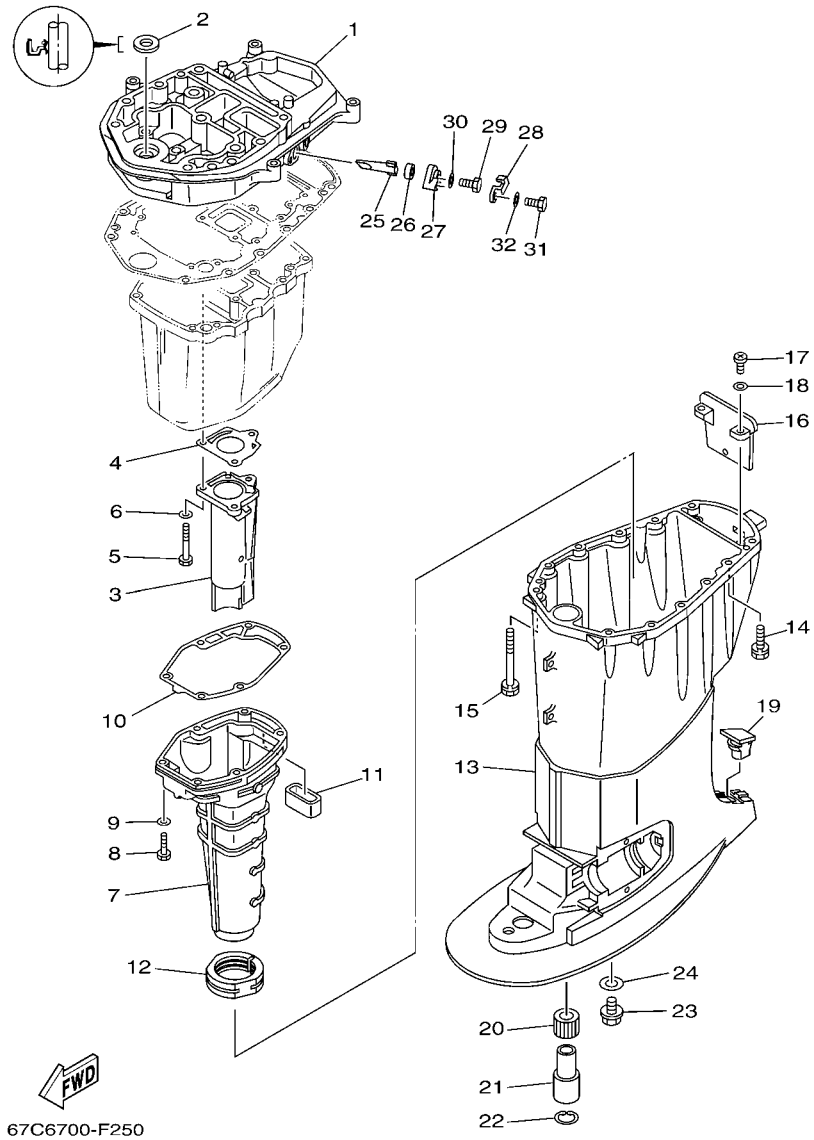

FIG. 24 UPPER CASING FOURREAU

REF. NO.	PART NO. N° PIECES	DESCRIPTION DESCRIPTION	MHD	ED	ET			REMARKS REMARQUES
25	62Y–11325–00	ANODE ANODE	1	1	1			
26	66M–11328–00	GROMMET, ANODE PASSE-FIL	1	1	1			
27	66M–11327–00–94	COVER, ANODE COUVERCLE ANODE	1	1	1			
28	66M–12535–00	PLATE PLAQUE	1	1	1			
29	97095–05012	BOLT BOULON	1	1	1			
30	92995–05600	WASHER RONDELLE	1	1	1			
31	97013–06020	BOLT BOULON	1	1	1			
32	92903–06600	WASHER, PLATE RONDELLE, PLATE	1	1	1			

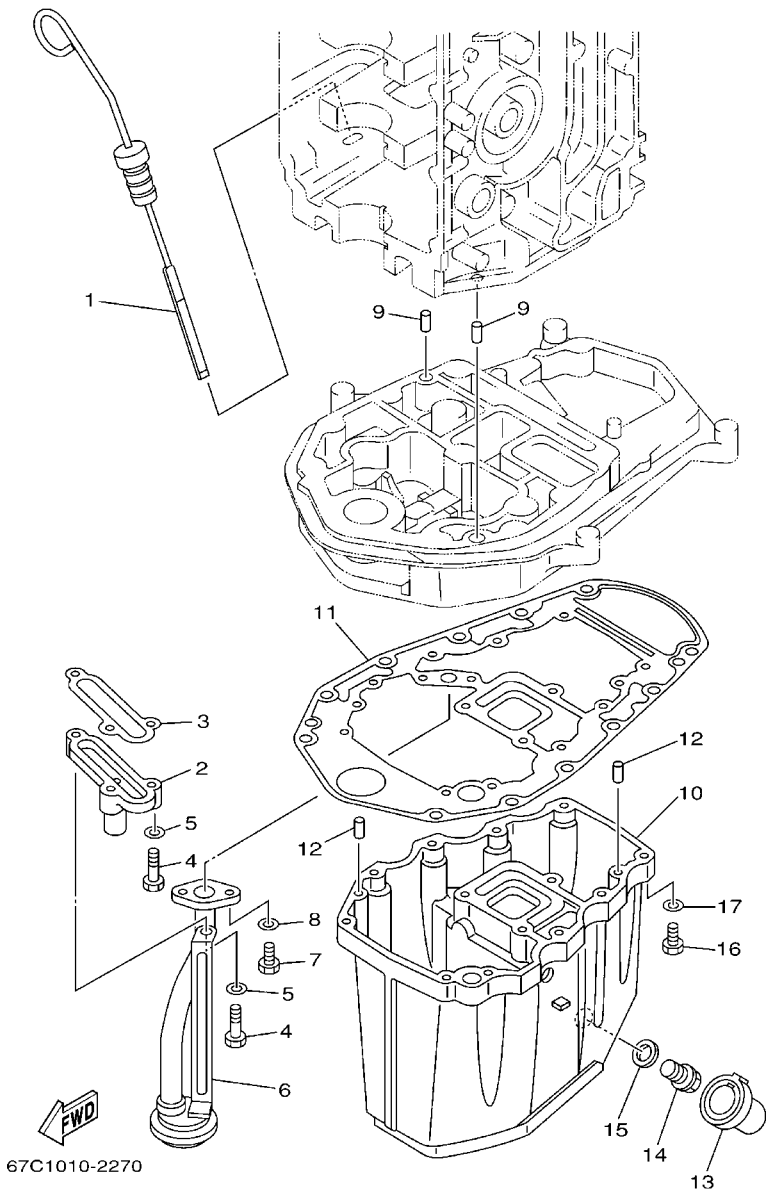

FIG. 25 OIL PAN — VENTILATEUR D'HUILE

REF. NO.	PART NO. N° PIECES	DESCRIPTION DESCRIPTION	MHD	ED	ET			REMARKS REMARQUES
1	67C–15362–00	PLUG, OIL LEVEL PLOT, NIVEAU D'HUILE	1	1	1			
2	62Y–11575–00	RELIEF VALVE ASSY SOUPAPE DE RENTREE D'AIR	1	1	1			
3	62Y–13475–00	GASKET JOINT	1	1	1			
4	97013–06025	BOLT BOULON	3	3	3			
5	92903–06600	WASHER, PLATE RONDELLE, PLATE	3	3	3			
6	62Y–13411–00	STRAINER, OIL FILTRE, HUILE	1	1	1			
7	97013–06016	BOLT BOULON	2	2	2			
8	92903–06600	WASHER, PLATE RONDELLE, PLATE	2	2	2			
9	93608–12M05	PIN, DOWEL AXE	2	2	2			
10	62Y–15311–02–5B	OIL PAN VENTILATEUR D'HUILE	1	1	1			
11	69W–15312–00	GASKET, OIL PAN JOINT DE VENTILATEUR D'HUILE	1	1	1			
12	93606–12019	PIN, DOWEL GOUPILLE	4	4	4			
13	67C–15316–10	DAMPER 1 AMORTISSEUR 1	1		1			S(16.1") S(16.1")
	67C–15316–00	DAMPER 1 AMORTISSEUR 1	1	1	1			L(21.0") L(21.0")
14	90340–14M06	PLUG, STRAIGHT SCREW PLOT, FILETE DROIT	1	1	1			
15	90430–14M09	GASKET JOINT	1	1	1			
16	97075–06025	BOLT BOULON	10	10	10			
17	92995–06600	WASHER RONDELLE	10	10	10			

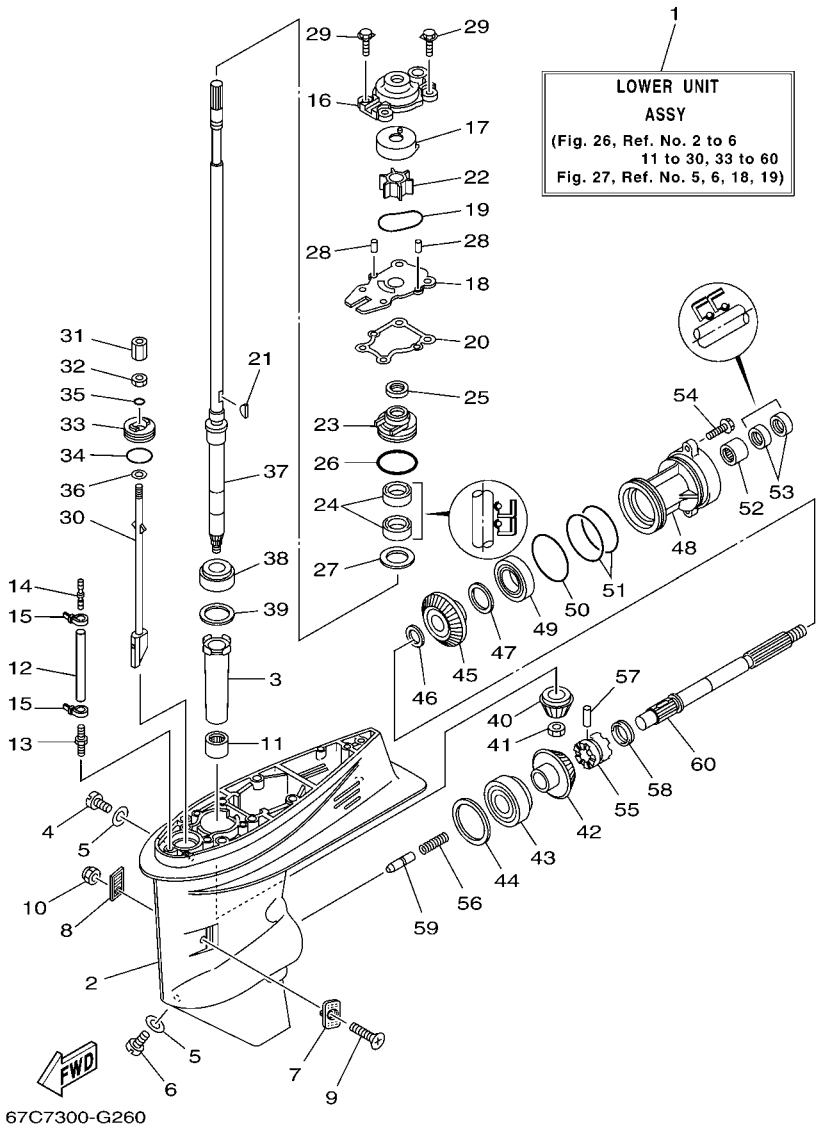

FIG. 26 LOWER CASING & DRIVE 1 BOITIER D'HELICE TRANSMISSION1

REF. NO.	PART NO. N° PIECES	DESCRIPTION DESCRIPTION	MHD	ED	ET			REMARKS REMARQUES
1	67C–45300–01–4D	LOWER UNIT ASSY UNITE INFERIEURE (ENS.)	1		1			S(16.1") S(16.1")
	67C–45300–11–4D	LOWER UNIT ASSY UNITE INFERIEURE (ENS.)	1	1	1			L(21.0") L(21.0")
2	67C–45301–00–4D	CASING, LOWER BEQUILLE	1	1	1			
3	6H4–45536–00	SLEEVE, DRIVE SHAFT MANCHON, ARBRE MOTEUR	1	1	1			
4	90340–08002	PLUG, STRAIGHT SCREW PLOT, FILETE DROIT	1	1	1			
5	90430–08020	GASKET JOINT	2	2	2			
6	688–45341–10	PLUG, DRAIN BOUCHON DE VIDANGE	1	1	1			
7	63D–45214–00	COVER, WATER INLET 1 GRILLE, ENTREE D'EAU 1	1	1	1			
8	63D–45215–00	COVER, WATER INLET 2 GRILLE, ENTREE D'EAU 2	1	1	1			
9	90142–05M06	SCREW, COUNTERSUNK VIS, TETE NOYEE	1	1	1			
10	95380–05600	NUT ECROU	1	1	1			
11	93315–32224	BEARING ROULEMENT	1	1	1			
12	90445–07ME8	HOSE (L80) DURITE (L80)	1	1	1			
13	6E5–45378–00	NIPPLE, HOSE RACCORD, TUYAU	1	1	1			
14	6E5–83558–10	END, NIPPLE RACCORD DE NIPPLE	1	1	1			
15	90465–11M10	CLAMP BRIDE	2	2	2			
16	66T–44311–00	HOUSING, WATER PUMP CORPS, POMPE A EAU	1	1	1			
17	63D–44322–00	INSERT, CARTRIDGE CUVETTE	1	1	1			
18	66T–44323–00	OUTER PLATE, CARTRIDGE PLAQUE EXTERIEURE	1	1	1			
19	93210–59MG7	O-RING JOINT TORIQUE	1	1	1			
20	63D–44316–00	GASKET, WATER PUMP JOINT, POMPE A EAU	1	1	1			
21	90280–03M03	KEY, WOODRUFF CLAVETTE, DEMI-LUNE	1	1	1			
22	6H4–44352–02	IMPELLER TURBINE	1	1	1			
23	63D–44341–00	HOUSING, WATER PUMP CORPS, POMPE A EAU	1	1	1			
24	93101–22M60	OIL SEAL JOINT SPY	2	2	2			
25	66T–45344–01	COVER, OIL SEAL FLASQE, JOINT D'HUILE	1	1	1			
26	93210–48MG8	O-RING JOINT TORIQUE	1	1	1			

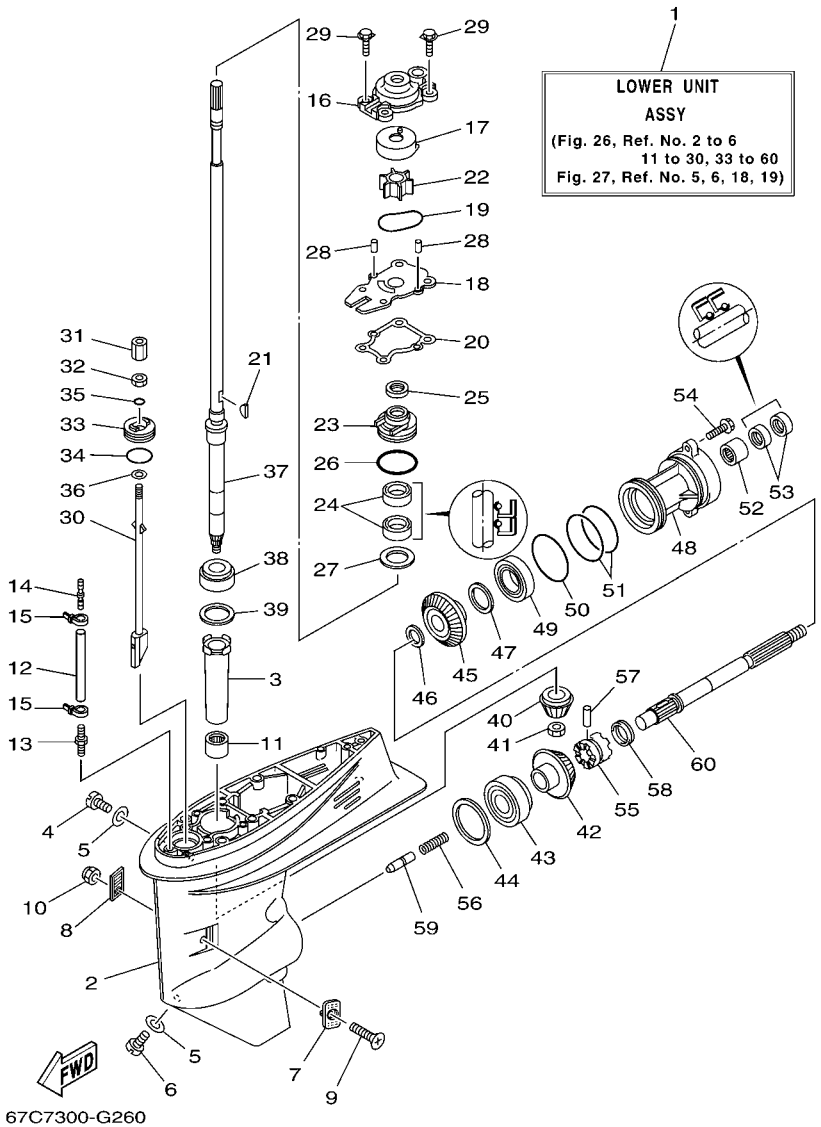

FIG. 26 LOWER CASING & DRIVE 1 BOITIER D'HELICE TRANSMISSION1

REF. NO.	PART NO. N° PIECES	DESCRIPTION DESCRIPTION	MHD	ED	ET			REMARKS REMARQUES
27	90201–27M00	WASHER, PLATE RONDELLE, PLATE	1	1	1			
28	93604–08062	PIN, DOWEL CLAVETTE	2	2	2			
29	90119–08M15	BOLT, WITH WASHER BOULON, AVEC RONDELLE	4	4	4			
30	67C–44150–10	SHIFT CAM ASSY CAME D'INVERSION	1	1	1			
31	67C–44146–00	CONNECTOR, SHIFT ROD CONNECTEUR, TIGE D'INVERSION	1	1	1			
32	95380–06700	NUT ECROU	1	1	1			
33	66T–45321–00	PLATE PLAQUETTE	1	1	1			
34	93210–33MG4	O-RING JOINT TORIQUE	1	1	1			
35	93210–06ME6	O-RING JOINT TORIQUE	1	1	1			
36	92990–06600	WASHER, PLATE RONDELLE, PLATE	1	1	1			
37	67C–45501–00	DRIVE SHAFT COMP. ARBRE MOTEUR COMP.	1		1			S(16.1") S(16.1")
	67C–45501–10	DRIVE SHAFT COMP. ARBRE MOTEUR COMP.	1	1	1			L(21.0") L(21.0")
38	93332–00001	BEARING ROULEMENT	1	1	1			
39	663–45587–01	SHIM (T:0.10MM) CALE (T:0.10MM)	1	1	1			UR UR
	663–45587–10	SHIM (T:0.12MM) CALE (T:0.12MM)	1	1	1			UR UR
	663–45587–20	SHIM (T:0.15MM) CALE (T:0.15MM)	1	1	1			UR UR
	663–45587–30	SHIM (T:0.18MM) CALE (T:0.18MM)	1	1	1			UR UR
	663–45587–40	SHIM (T:0.30MM) CALE (T:0.30MM)	1	1	1			UR UR
	663–45587–50	SHIM (T:0.40MM) CALE (T:0.40MM)	1	1	1			UR UR
	663–45587–60	SHIM (T:0.50MM) CALE (T:0.50MM)	1	1	1			UR UR
40	66T–45551–00	PINION (13T) PIGNON D'ATTAQUE (13D)	1	1	1			
41	90170–12138	NUT ECROU	1	1	1			
42	66T–45560–01	GEAR 1 (26T) PIGNON 1 (26T)	1	1	1			
43	93332–00003	BEARING ROULEMENT	1	1	1			
44	663–45567–01	SHIM (T:0.10MM) CALE (T:0.10MM)	1	1	1			UR UR
	663–45567–10	SHIM (T:0.12MM) CALE (T:0.12MM)	1	1	1			UR UR
	663–45567–20	SHIM (T:0.15MM) CALE (T:0.15MM)	1	1	1			UR UR

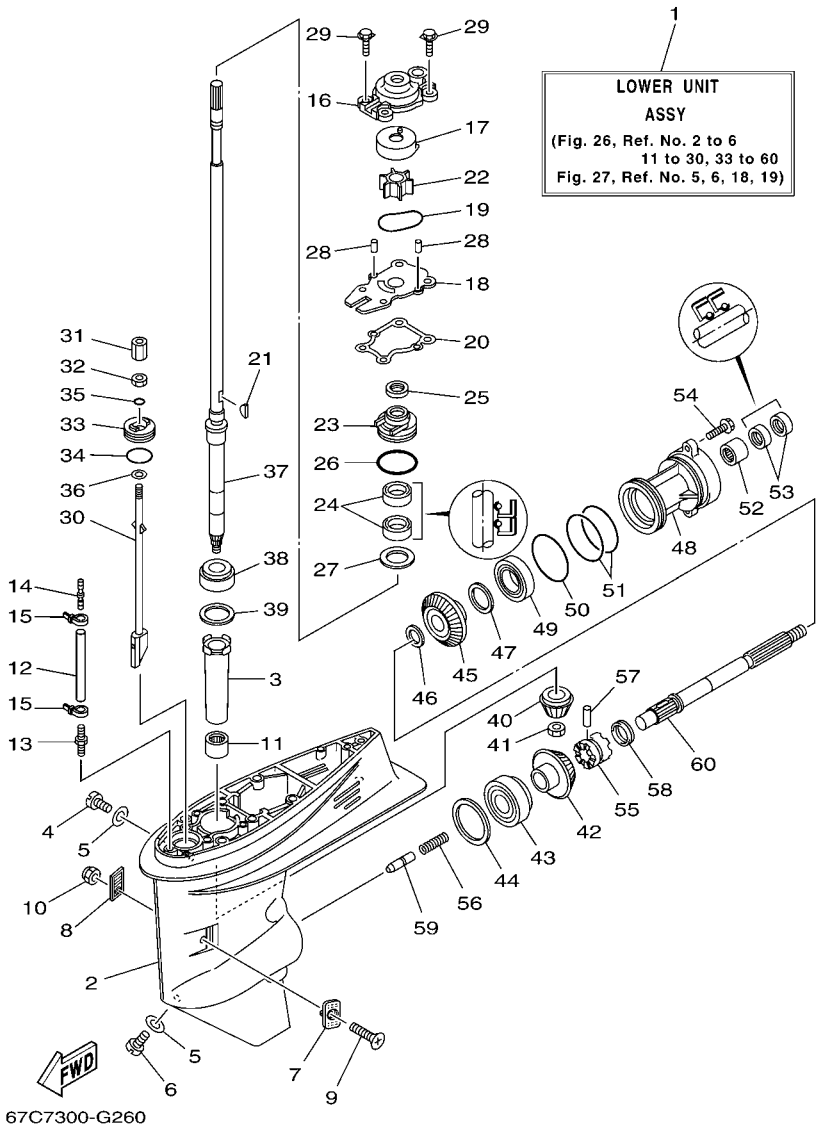

FIG. 26 LOWER CASING & DRIVE 1 BOITIER D'HELICE TRANSMISSION1

REF. NO.	PART NO. N° PIECES	DESCRIPTION DESCRIPTION	MHD	ED	ET			REMARKS REMARQUES
44	663–45567–30	SHIM (T:0.18MM) CALE (T:0.18MM)	1	1	1			UR UR
	663–45567–40	SHIM (T:0.30MM) CALE (T:0.30MM)	1	1	1			UR UR
	663–45567–50	SHIM (T:0.40MM) CALE (T:0.40MM)	1	1	1			UR UR
	663–45567–60	SHIM (T:0.50MM) CALE (T:0.50MM)	1	1	1			UR UR
45	66T–45571–00	GEAR 2 (26T) PIGNON 2 (26T)	1	1	1			
46	90201–22429	WASHER, PLATE RONDELLE, PLATE	1	1	1			
47	63D–45577–00	SHIM (T:0.10MM) CALE (T:0.10MM)	1	1	1			UR UR
	63D–45577–10	SHIM (T:0.12MM) CALE (T:0.12MM)	1	1	1			UR UR
	63D–45577–20	SHIM (T:0.15MM) CALE (T:0.15MM)	1	1	1			UR UR
	63D–45577–30	SHIM (T:0.18MM) CALE (T:0.18MM)	1	1	1			UR UR
	63D–45577–40	SHIM (T:0.30MM) CALE (T:0.30MM)	1	1	1			UR UR
	63D–45577–50	SHIM (T:0.40MM) CALE (T:0.40MM)	1	1	1			UR UR
	63D–45577–60	SHIM (T:0.50MM) CALE (T:0.50MM)	1	1	1			UR UR
48	63D–45361–02–4D	CAP, LOWER CASING COUVERCLE, BOITIER D'HELICE	1	1	1			
49	93306–001U1	BEARING ROULEMENT	1	1	1			
50	93210–69MG6	O-RING JOINT TORIQUE	1	1	1			
51	93210–74MG5	O-RING JOINT TORIQUE	2	2	2			
52	93317–22204	BEARING ROULEMENT	1	1	1			
53	93101–22M00	OIL SEAL JOINT SPY	2	2	2			
54	90105–08M61	BOLT, FLANGE BOULON	2	2	2			
55	66T–45631–00	CLUTCH, DOG CRABOT	1	1	1			
56	90501–18M01	SPRING, COMPRESSION RESSORT, COMPRESSION	1	1	1			
57	90250–06023	PIN, STRAIGHT GOUPILLE, DROITE	1	1	1			
58	67C–45633–00	RING, CROSS PIN JONC, GOUPILLE CRABOT	1	1	1			
59	66T–45635–00	PLUNGER, SHIFT POUSSOIR D'EMBRAYAGE	1	1	1			
60	66T–45611–00	SHAFT, PROPELLER ARBRE, HELICE	1	1	1			

FIG. 27 LOWER CASING & DRIVE 2 BOITIER D'HELICE TRANSMISSION2

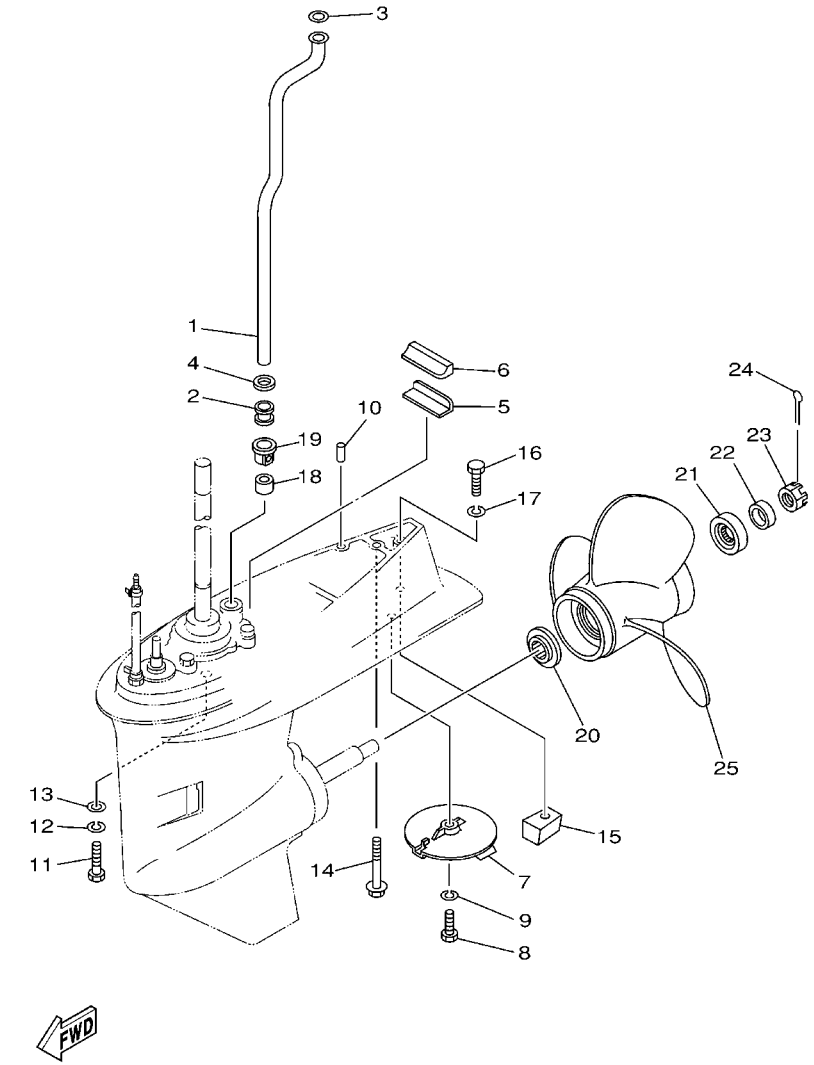

67C0010-0290

REF. NO.	PART NO. N° PIECES	DESCRIPTION DESCRIPTION	MHD	ED	ET			REMARKS REMARQUES
1	67C–44361–00	TUBE, WATER TUBE D'EAU	1		1			S(16.1") S(16.1")
	62Y–44361–00	TUBE, WATER TUBE D'EAU	1	1	1			L(21.0") L(21.0")
2	663–44367–00	DAMPER, WATER SEAL JOINT TUBE D'EAU	1	1	1			
3	90202–12060	WASHER, PLATE RONDELLE, PLATE	1	1	1			
4	90430–12072	GASKET JOINT	1	1	1			
5	663–45376–00–94	GUIDE, SEAL DAMPER BUTEE, JOINT CAOUTCHOUC	1	1	1			
6	63D–45375–00	DAMPER, SEAL BOURRELET, CAOUTCHOUC	1	1	1			
7	67C–45371–00	TAB-TRIM ANODE DERIVE	1	1	1			
8	97095–08025	BOLT BOULON	1	1	1			
9	92995–08100	WASHER RONDELLE	1	1	1			
10	93606–12019	PIN, DOWEL GOUPILLE	2	2	2			
11	97075–10040	BOLT BOULON	4	4	4			
12	92995–10100	WASHER RONDELLE	4	4	4			
13	92995–10600	WASHER RONDELLE	4	4	4			
14	90119–08M44	BOLT, WITH WASHER BOULON, AVEC RONDELLE	1	1	1			
15	67C–45251–00	ANODE ANODE	1	1	1			
16	97095–08035	BOLT BOULON	1	1	1			
17	92995–08100	WASHER RONDELLE	1	1	1			
18	663–44366–00	DAMPER, WATER SEAL JOINT, TUBE D'EAU	1	1	1			
19	63D–44312–00	COVER, WATER PUMP HOUSING COUVERCLE	1	1	1			
20	663–45987–02	SPACER ENTRETOISE	1	1	1			
21	66T–45997–00	SPACER ENTRETOISE	1	1	1			
22	90389–22M01	BUSH DOUILLE	1	1	1			
23	90171–16011	NUT, CASTLE ECROU, CRENELE	1	1	1			
24	91490–30025	PIN. COTTER GOUPILLE	1	1	1			
25	69W–45945–00–EL	PROPELLER (3X11-1/8"X13"-G) HELICE (3X11-1/8"X13"-G)	1	1	1			UR UR
	69W–45947–00–EL	PROPELLER (3X11-5/8"X11"-G) HELICE (3X11-5/8"X11"-G)	1	1	1			UR UR

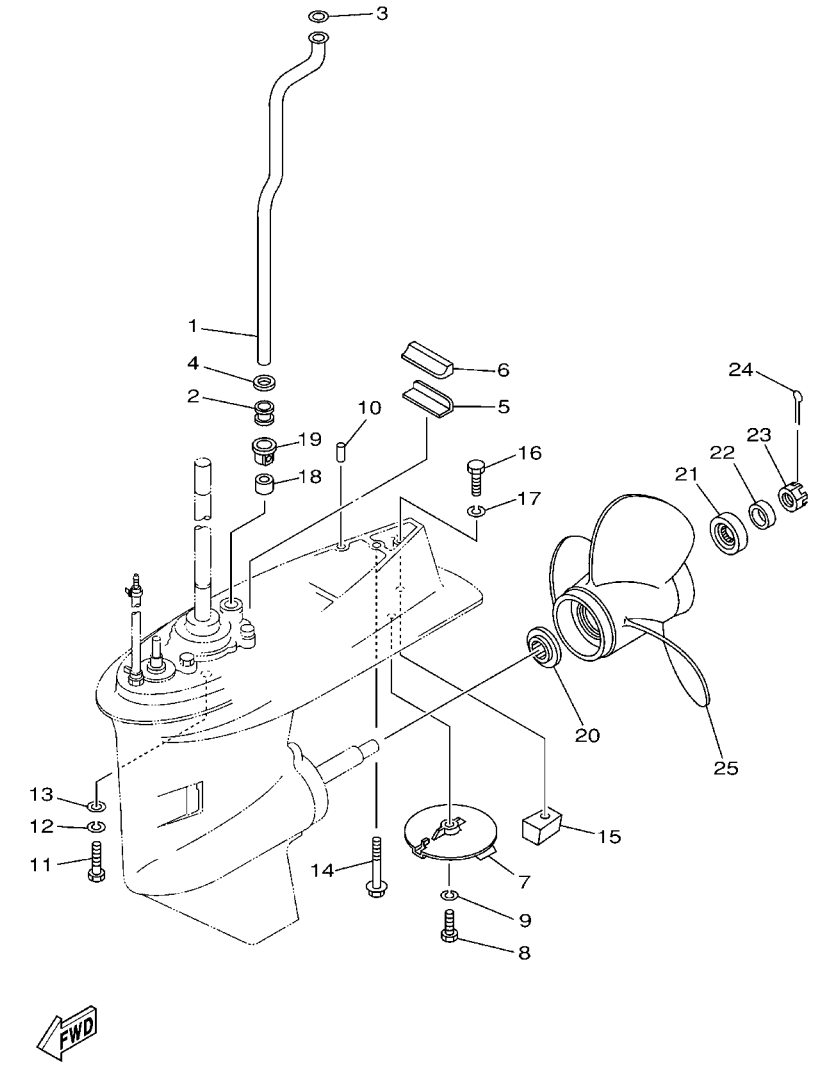

67C0010-0290

FIG. 27 LOWER CASING & DRIVE 2 BOITIER D'HELICE TRANSMISSION2

REF. NO.	PART NO. N° PIECES	DESCRIPTION DESCRIPTION	MHD	ED	ET			REMARKS REMARQUES
25	69W–45952–00–EL	PROPELLER (3X11-3/8"X12"-G) HELICE (3X11-3/8"X12"-G)	1	1	1			UR UR
	663–45941–01–EL	PROPELLER (3X10-3/4"X17"-G) HELICE (3X10-3/4"X17"-G)	1	1	1			UR UR
	663–45949–01–EL	PROPELLER (3X10-3/4"X16"-G) HELICE (3X10-3/4"X16"-G)	1	1	1			UR UR
	663–45952–02–EL	PROPELLER (3X11-3/8"X12"-G) HELICE (3X11-3/8"X12"-G)	1	1	1			UR UR
	663–45956–01–EL	PROPELLER (3X12-1/4"X9"-G) HELICE (3X12-1/4"X9"-G)	1	1	1			UR UR
	663–45958–01–EL	PROPELLER (3X11-1/4"X14"-G) HELICE (3X11-1/4"X14"-G)	1	1	1			UR UR
	6H5–45943–00–EL	PROPELLER (3X10"X15"-G) HELICE (3X10"X15"-G)	1	1	1			UR WITH LIP CUP UR WITH LIP CUP
	6H5–45945–00–EL	PROPELLER (3X10-3/8"X13"-G) HELICE (3X10-3/8"X13"-G)	1	1	1			UR WITH LIP CUP UR WITH LIP CUP
	6H5–45952–00–EL	PROPELLER (3X10-5/8"X12"-G) HELICE (3X10-5/8"X12"-G)	1	1	1			UR WITH LIP CUP UR WITH LIP CUP
	6H5–45958–00–EL	PROPELLER (3X10-1/4"X14"-G) HELICE (3X10-1/4"X14"-G)	1	1	1			UR WITH LIP CUP UR WITH LIP CUP
	663–45930–00–98	PROPELLER (3X10-1/4"X14"-G) HELICE (3X10-1/4"X14"-G)	1	1	1			UR UR
	663–45974–02–98	PROPELLER (3X10-5/8"X13"-G) HELICE (3X10-5/8"X13"-G)	1	1	1			UR UR
	663–45976–00–98	PROPELLER (3X10-1/4"X15"-G) HELICE (3X10-1/4"X15"-G)	1	1	1			UR UR
	663–45978–00–98	PROPELLER (3X10-1/4"X16"-G) HELICE (3X10-1/4"X16"-G)	1	1	1			UR UR
	697–45970–00–98	PROPELLER (3X11-1/4"X14"-G) HELICE (3X11-1/4"X14"-G)	1	1	1			UR UR
	663–45970–60–98	PROPELLER (3X11-3/4"X12"-G) HELICE (3X11-3/4"X12"-G)	1	1	1			UR UR
	663–45972–60–98	PROPELLER (3X12"X11"-G) HELICE (3X12"X11"-G)	1	1	1			UR UR
	663–45974–60–98	PROPELLER (3X11-1/2"X13"-G) HELICE (3X11-1/2"X13"-G)	1	1	1			UR UR

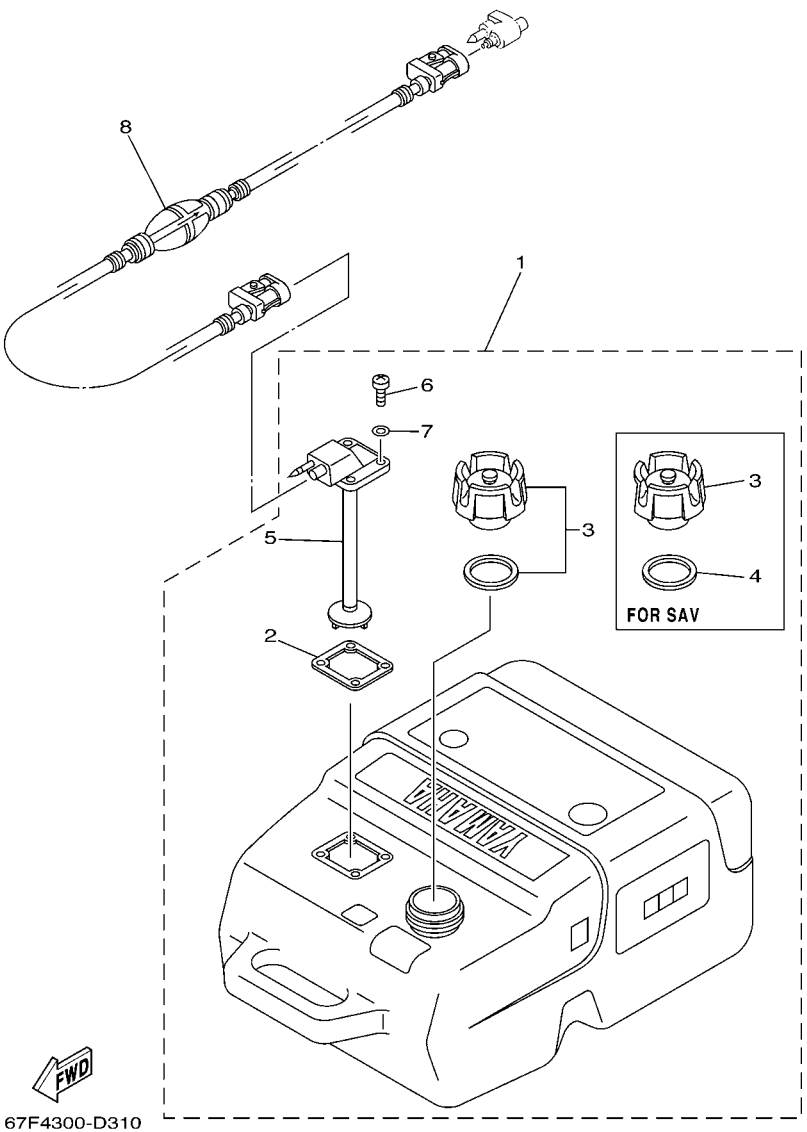

FIG. 28 FUEL TANK — RESERVOIR A CARBURANT

REF. NO.	PART NO. N° PIECES	DESCRIPTION DESCRIPTION	MHD	ED	ET			REMARKS REMARQUES
1	6YK–24201–03	FUEL TANK ASSY (25L) RESERVOIR A ESSENCE (ENS.) 25L	1	1	1			AP FOR STD AP FOR STD
	6YK–24201–10	FUEL TANK ASSY (25L) RESERVOIR A ESSENCE (ENS.) 25L	1	1	1			AP FOR SAV AP FOR SAV
2	6YL–24268–01	.GASKET, FUEL METER .JOINT, JAUGE A CARBURANT	1	1	1			
3	6YK–24610–01	.CAP ASSY .BOUCHON	1	1	1			FOR STD FOR STD
	6YK–24610–10	.CAP ASSY .BOUCHON	1	1	1			FOR SAV FOR SAV
4	6YL–24641–00	.GASKET, CAP 1 .JOINT 1, BOUCHON	1	1	1			FOR SAV FOR SAV
5	6YK–24260–01	.FUEL METER ASSY .INDICATEUR DE CARBURANT	1	1	1			
6	90157–05M16	.SCREW, PAN HEAD .VIS, TETE TRONCONIQUE	4	4	4			
7	6YL–24329–00	.SEAL .JOINT	4	4	4			
8	6YL–24306–54	FUEL PIPE COMP. 1 DURITE A ESSENCE 1	1	1	1			AP AP

FIG. 29 STEERING GUIDE FIXATION DE DIRECTION

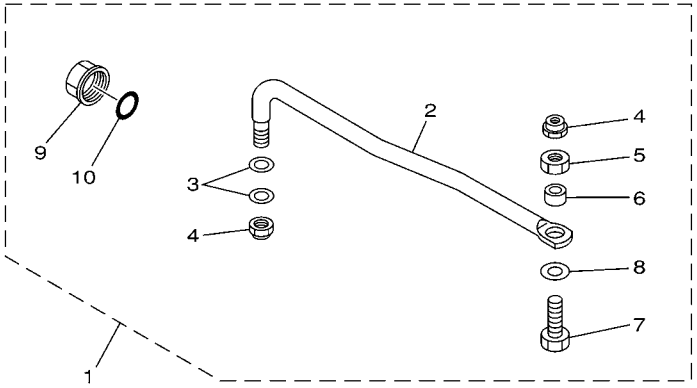

65W0010-8210

REF. NO.	PART NO. N° PIECES	DESCRIPTION DESCRIPTION	MHD	ED	ET			REMARKS REMARQUES
1	65W–61350–00	STEERING GUIDE ATTACHMENT KIT FIXATIONS DE DIRECTION		1	1			AP AP
2	65W–61351–00	.ROD, STEERING LINK .RENVOI DE DIRECTION		1	1			
3	90201–10M20	.WASHER, PLATE .RONDELLE, PLATE		2	2			
4	90185–09M01	.NUT, SELF-LOCKING .ECROU,AUTO-BLOQUANT		2	2			
5	90170–09M03	.NUT .ECROU		1	1			
6	90387–10M42	.COLLAR .COLLERETTE		1	1			
7	90101–09M01	.BOLT .BOULON		1	1			
8	90201–10M63	.WASHER, PLATE .RONDELLE, PLATE		1	1			
9	6E5–43145–01	.CAP, CLAMP BRACKET .CAPUCHON, PRESSE		1	1			
10	93210–16275	.O-RING .JOINT TORIQUE		1	1			

FIG. 30 REMOTE CONTROL BOX BOITIER DE COMMANDE A DISTANCE

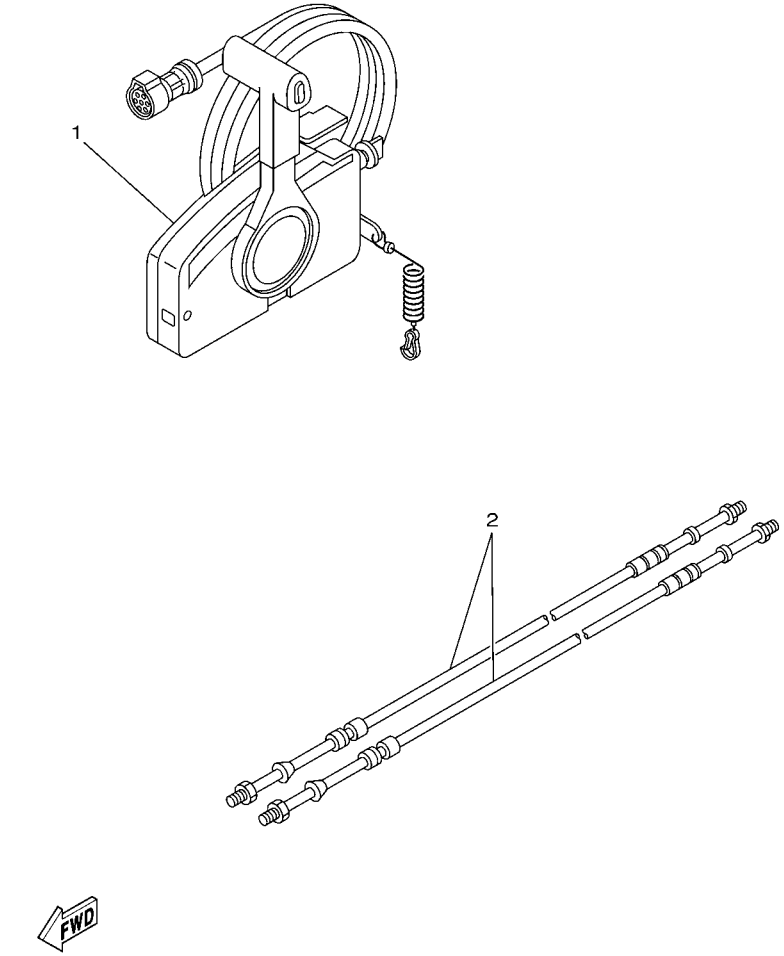

67M0100-8280

REF. NO.	PART NO. N° PIECES	DESCRIPTION DESCRIPTION	MHD	ED	ET			REMARKS REMARQUES
1	703–48207–17	REMOTE CONTROL ASSY (10P) BOITIER DE COMMANDE A DISTANCE		1	1			AP WITH PT/T SW. AP WITH PT/T SW.
2	701–48310–90	CABLE, REMOTE CONTROL L=11F CABLE, COMMANDE A DISTANCE:11F		2	2			UR UR
	701–48320–00	CABLE, REMOTE CONTROL L=12F CABLE, COMMANDE A DISTANCE:12F		2	2			UR UR
	701–48320–20	CABLE, REMOTE CONTROL L=13F CABLE, COMMANDE A DISTANCE:13F		2	2			UR UR
	701–48320–50	CABLE, REMOTE CONTROL L=15F CABLE, COMMANDE A DISTANCE:15F		2	2			UR UR

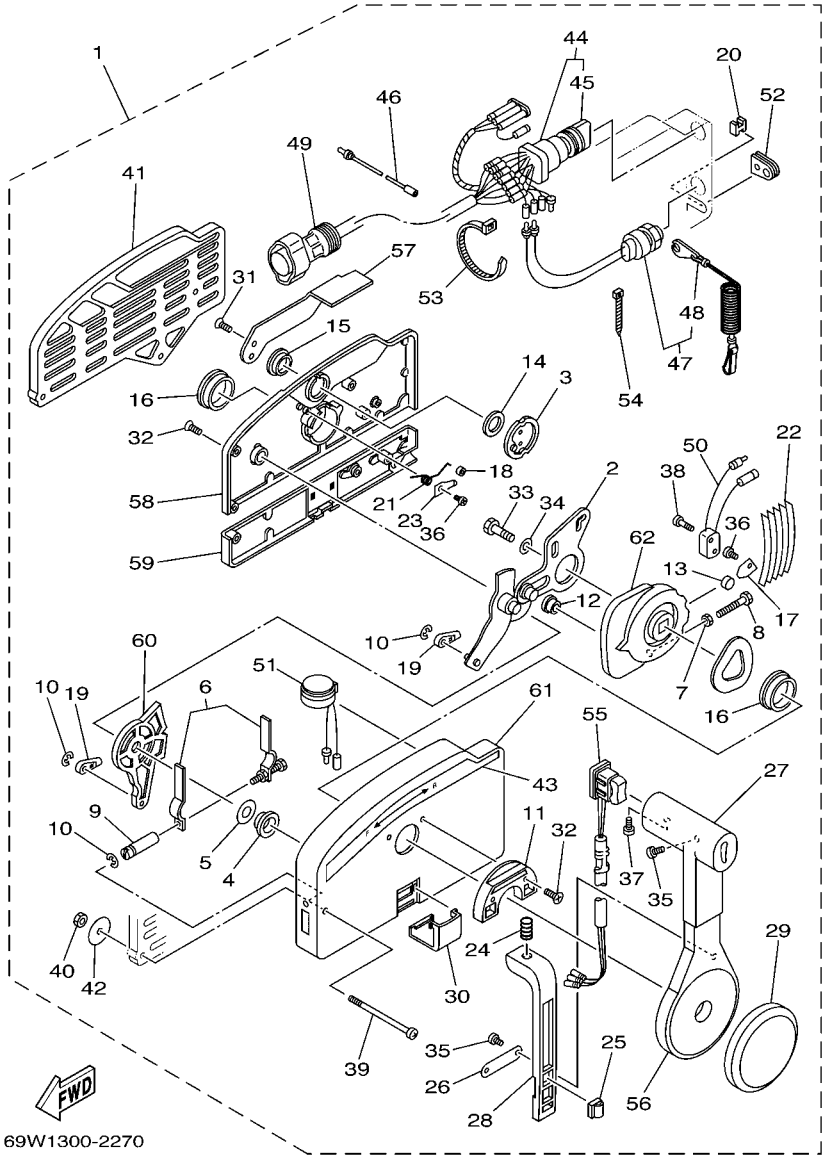

FIG. 31 REMOTE CONTROL ASSY — BOITIER DE COMMANDE A DISTANCE

REF. NO.	PART NO. N° PIECES	DESCRIPTION DESCRIPTION	MHD	ED	ET			REMARKS REMARQUES
1	703–48207–17	REMOTE CONTROL ASSY (10P) BOITIER DE COMMANDE A DISTANCE		1	1			AP WITH PT/T SW. AP WITH PT/T SW.
2	703–48261–01	.ARM, THROTTLE .BRAS, ACCELERATION		1	1			
3	703–48153–00	.SHAFT, FREE ACCEL. .AXE		1	1			
4	703–48235–00	.BUSHING .COUSSINET		1	1			
5	703–48268–00	.SPACER .ENTRETOISE		1	1			
6	703–48264–00	.FRICTION, THROTTLE .FRICTION, ACCELERATION		1	1			
7	95380–05600	.NUT .ECROU		1	1			
8	97380–05025	.BOLT .BOULON, HEXAGONAL		1	1			
9	703–48265–00	.SHAFT, FRICTION .AXE, COPILOTE		1	1			
10	93430–06024	.CIRCLIP .CLIPS		3	3			
11	703–48245–00	.PLATE, LOCK .PLAQUE, VERROU		1	1			
12	703–48252–00	.ROLLER, CAM .POULIE		1	1			
13	701–48248–00	.ROLLER, FREE ACCEL. .POULIE		1	1			
14	703–48198–00	.WASHER, WAVE .RONDELLE, ELASTIQUE ONDULEE		1	1			
15	703–48243–00	.BUSHING .COUSSINET		1	1			
16	703–48236–00	.BUSHING 1 .POULIE		2	2			
17	703–48189–00	.RETAINER .FLASQUE		1	1			
18	703–48234–00	.ROLLER, DETENT .POULIE		1	1			
19	703–48345–01	.CABLE END, REMOTE CONTROL 2 .CHAPE CABLE		2	2			
20	703–48358–00	.ANCHOR, CABLE .COLLIER		1	1			
21	703–48244–00	.SPRING, FREE ACCEL. .RESSORT		1	1			
22	703–48238–00	.SPRING, DETENT .RESSORT		5	5			
23	703–48246–00	.SPACER .ENTRETOISE		1	1			
24	703–48227–00	.SPRING, NEUTRAL LOCK .RESSORT		1	1			
25	703–82594–00	.CLAMP .BRIDE		1	1			WITH PT/T SW. WITH PT/T SW.
26	703–48226–00	.PLATE, STOPPER .PLAQUETTE		1	1			
27	703–48222–00	.GRIP, CONTROL LEVER .POIGNEE, COMMANDE LEVIER		1	1			SINGLE SINGLE

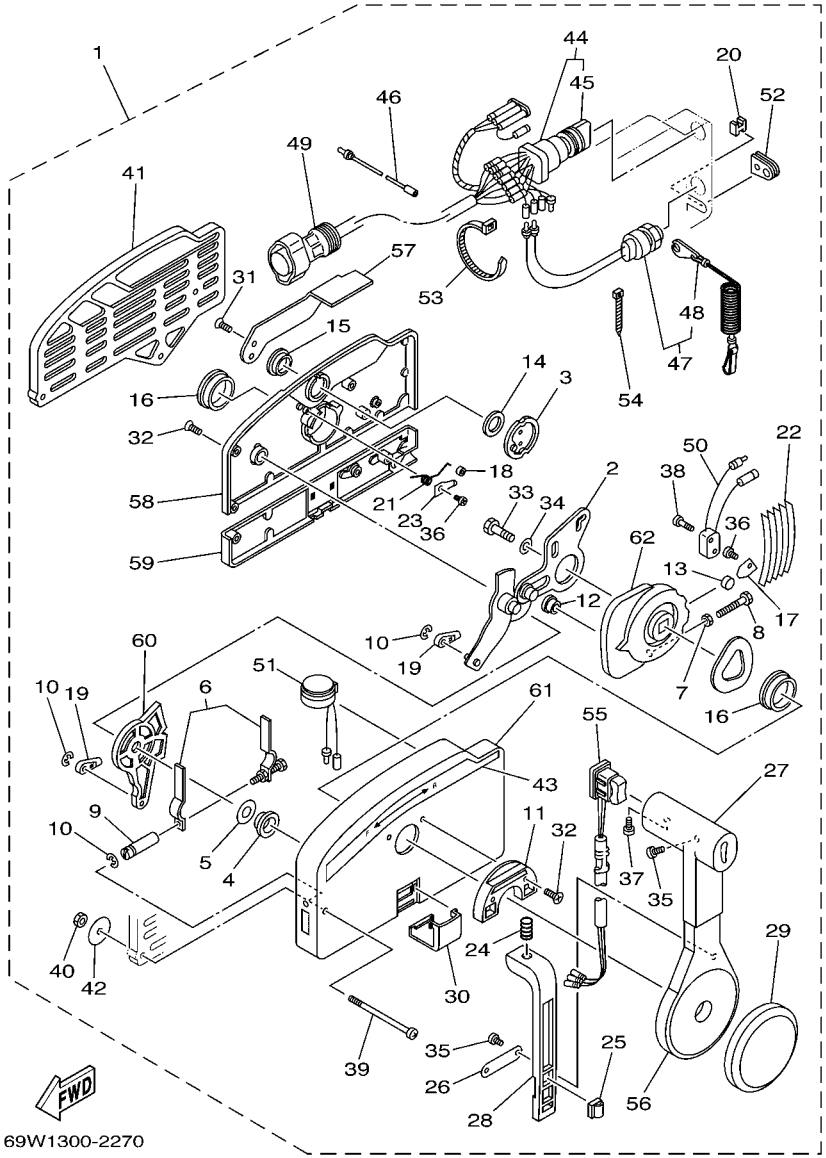

FIG. 31 REMOTE CONTROL ASSY — BOITIER DE COMMANDE A DISTANCE

REF. NO.	PART NO. N° PIECES	DESCRIPTION DESCRIPTION	MHD	ED	ET			REMARKS REMARQUES
28	703–48223–00	.LOCK, NEUTRAL .VERROU, NEUTRAL		1	1			
29	703–48225–00	.COVER .COUVERCLE		1	1			
30	703–48219–00	.COVER, LEAD .COUVERCLE		1	1			
31	703–48281–00	.SCREW .VIS		2	2			
32	703–48282–00	.SCREW .VIS		7	7			
33	97380–08030	.BOLT .BOULON, HEXAGONAL		1	1			
34	92990–08600	.WASHER, PLATE .RONDELLE, PLATE		1	1			
35	98580–04010	.SCREW, PAN HEAD .VIS		3	3			
36	98580–04006	.SCREW, PAN HEAD .VIS		2	2			
37	98580–05010	.SCREW, PAN HEAD .VIS		1	1			
38	98580–03015	.SCREW, PAN HEAD .VIS		2	2			
39	703–48291–10	.SCREW (M6) .VIS (M6)		3	3			
40	95380–06600	.NUT, HEXAGON .ECROU		3	3			
41	703–48293–10	.SPACER, REMOTE CONTROL .ENTRETOISE		1	1			SINGLE SINGLE
42	701–48287–00	.WASHER .RONDELLE		3	3			
43	703–48215–00	.GRAPHIC .ADHESIF		1	1			
44	703–82510–43	.MAIN SWITCH ASSY .CONTACTEUR A CLEF COMPLET		1	1			
45	703–82577–00	..CAP, KEY ..CABOCHON		1	1			
46	703–82531–00	.WIRE, LEAD (L70) .FIL (L70)		1	1			
47	688–82575–01	.ENGINE STOP SWITCH ASSY .COUPE CIRCUIT CPLT		1	1			
48	682–82556–00	..LANYARD, STOP SWITCH ..PLAQUETTE		1	1			
49	688–8258A–20	.EXTENSION, WIRE HARNESS (4.9M) .EXTENSION, FAISCEAU DE FILS (4		1	1			(10P) (10P)
50	703–82540–00	.NEUTRAL SWITCH ASSY .CONTACTEUR DE POINT-MORT		1	1			
51	703–83383–02	.BUZZER .RONFLEUR		1	1			
52	703–48284–10	.GROMMET .PASSE-FIL		1	1			
53	703–82591–00	.BAND .COLLIER		3	3			
54	703–82592–00	.BAND .COLLIER		1	1			

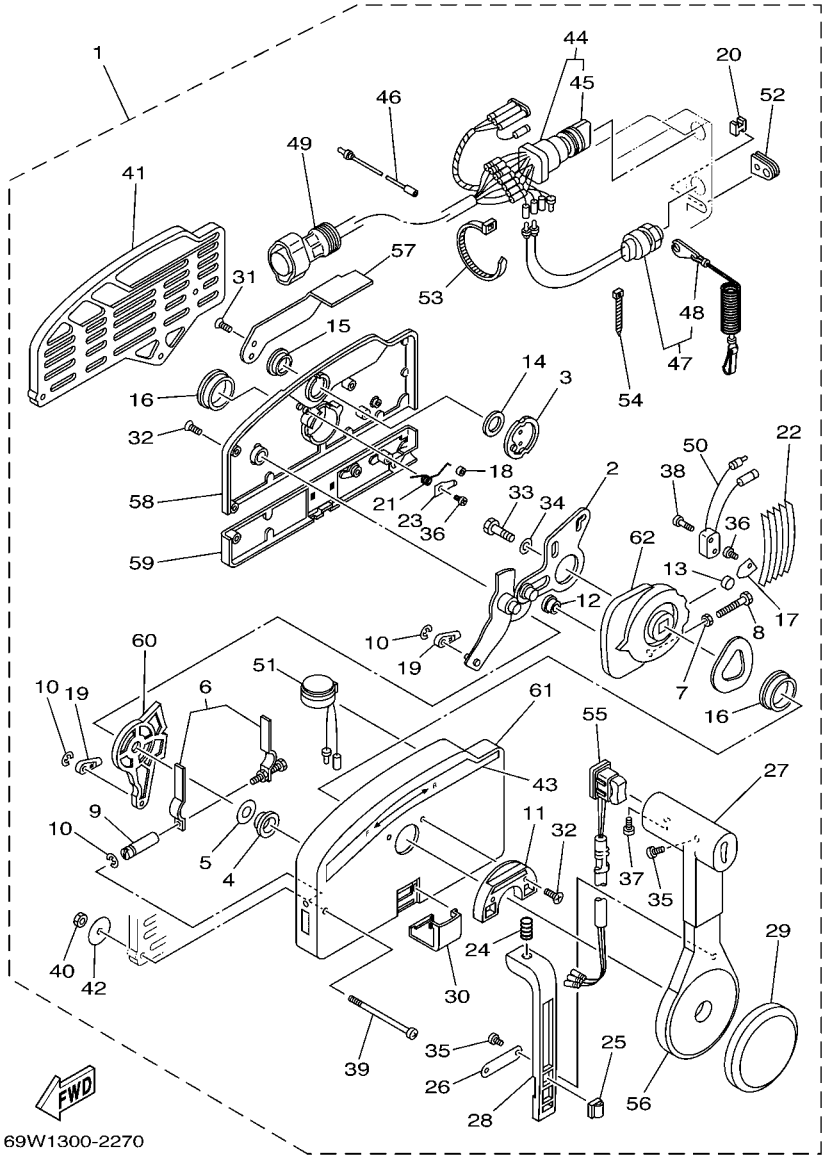

FIG. 31 REMOTE CONTROL ASSY BOITIER DE COMMANDE A DISTANCE

REF. NO.	PART NO. N° PIECES	DESCRIPTION DESCRIPTION	MHD	ED	ET			REMARKS REMARQUES
55	703–82563–12	.TRIM & TILT SWITCH ASSY .INCLINER ET PARER COMMUTATEUR		1	1			WITH PT/T SW. WITH PT/T SW.
56	703–48221–00	.LEVER, CONTROL .LEVIER, COMMANDE		1	1			
57	703–48152–00	.KNOB, FREE ACCEL. .BOUTON		1	1			
58	703–48212–00	.BACK PLATE 1 .PLAQUETTE 1		1	1			
59	703–48213–00	.BACK PLATE 2 .PLAQUETTE 2		1	1			
60	703–48271–00	.ARM, SHIFT .BRAS		1	1			
61	703–48211–01	.HOUSING,1 .CORPS		1	1			
62	703–48232–00	.GEAR .PIGNON		1	1			

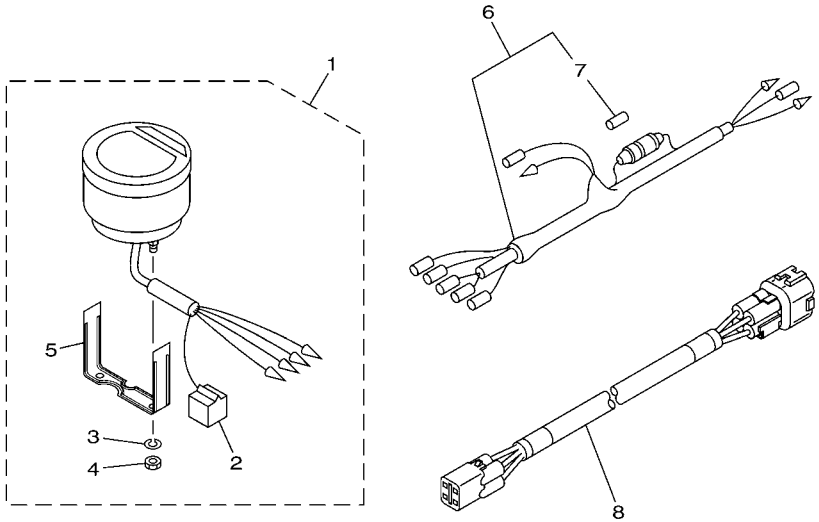

67C7700-G330

FIG. 32 METER COMPTEUR

REF. NO.	PART NO. N° PIECES	DESCRIPTION DESCRIPTION	MHD	ED	ET			REMARKS REMARQUES
1	6Y5–8350T–90	DIGITAL TACHOMETER ASSY COMPTE-TOURS NUMERIQUE CPLT			1			AP AP
2	9E450–04533	.CONNECTOR .CONNECTEUR			1			F-4-W F-4-W
3	92990–04100	.WASHER, SPRING .RONDELLE, GROWER			2			
4	95380–04600	.NUT .ECROU			2			
5	6Y5–8355X–T1	.BRACKET, METER 1 .CROCHET, COMPTEUR			1			
6	6Y5–83553–00	WIRE, LEAD (L=2.5M) FIL (L=2.5M)			1			AP AP
7	1E6–82151–00	.FUSE (10A) .FUSIBLE (10A)			1			
8	6Y5–83653–20	WIRE, LEAD (L=7.0M) FIL (L=7.0M)			1			AP 4P,7M AP 4P,7M

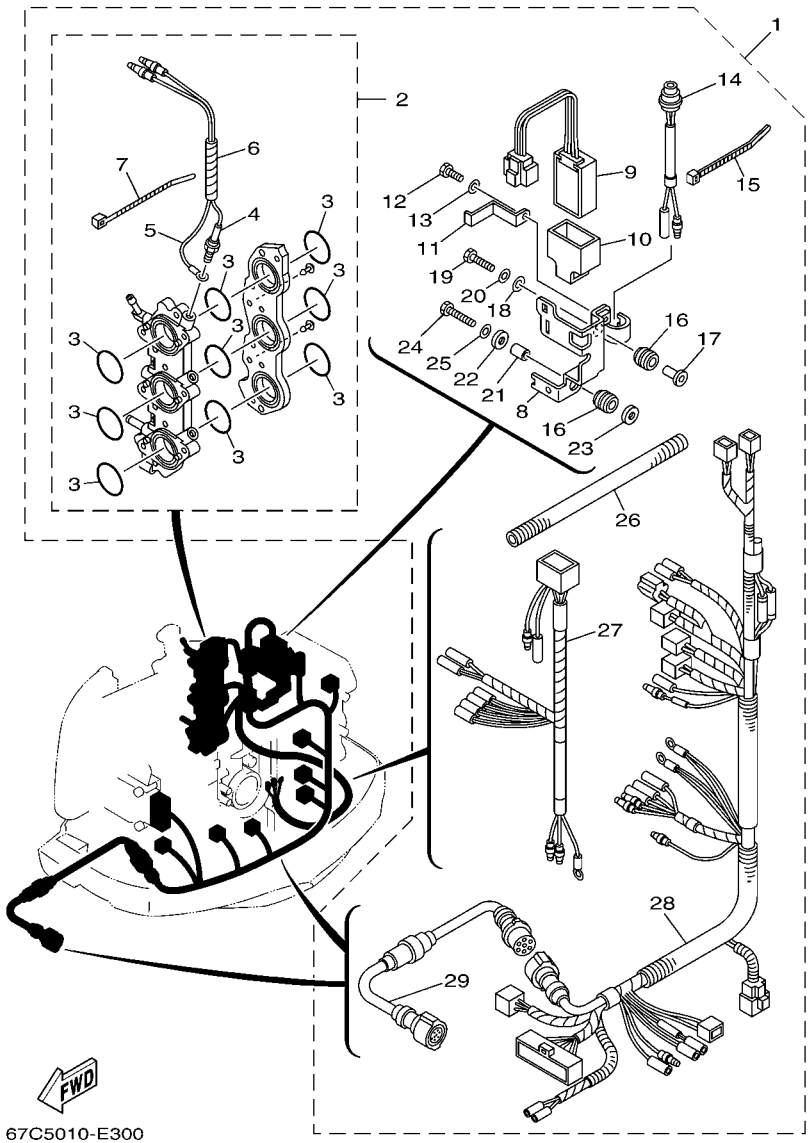

FIG. 33 OPTIONAL PARTS — PIECES OPTIONNELLES

REF. NO.	PART NO. N° PIECES	DESCRIPTION DESCRIPTION	MHD	ED	ET			REMARKS REMARQUES
1	67C–83790–01	HEATER ASSY RECHAUFFEUR	1	1	1			AP AP
2	67C–13589–10	.CARBURETOR JOINT COMP. .RACCORD, CARBURATEUR	1	1	1			
3	67C–14561–00	..O-RING ..JOINT TORIQUE	9	9	9			
4	69W–83792–00	..HEATER ..CHALEUR	3	3	3			
5	69W–83354–00	..WIRE, EARTH LEAD 1 ..FIL 1, MASSE	3	3	3			
6	90446–06M90	..HOSE (L120) ..DURITE (L120)	3	3	3			
7	90465–11M10	..CLAMP ..BRIDE	3	3	3			
8	67C–14291–00	.BRACKET 1 .SUPPORT 1	1	1	1			
9	67F–81930–00	.CONTROL UNIT ASSY .BLOC DE CONTROLE	1	1	1			
10	69W–85546–00	.BAND .COLLIER	1	1	1			
11	69W–14292–00	.BRACKET 2 .SUPPORT 2	1	1	1			
12	97095–06016	.BOLT .BOULON	1	1	1			
13	92995–06600	.WASHER .RONDELLE	1	1	1			
14	67F–82560–00	.THERMO SWITCH ASSY .THERMO-CONTACT COMPLET	1	1	1			
15	90465–13M18	.CLAMP .BRIDE	2	2	2			
16	90480–10M23	.GROMMET .PASSE-FIL	2	2	2			
17	90387–06M60	.COLLAR .COLLERETTE	1	1	1			
18	90201–06M31	.WASHER, PLATE .RONDELLE, PLATE	1	1	1			
19	97095–06025	.BOLT .BOULON	1	1	1			
20	92995–06600	.WASHER .RONDELLE	1	1	1			
21	90380–08M05	.BUSH, SOLID .DOUILLE, SOLIDE	1	1	1			
22	90201–08M05	.WASHER, PLATE .RONDELLE, PLATE	1	1	1			
23	90201–08M07	.WASHER, PLATE .RONDELLE, PLATE	1	1	1			
24	97095–08030	.BOLT .BOULON	1	1	1			
25	92995–08600	.WASHER .RONDELLE	1	1	1			
26	90446–14M58	.HOSE .DURITE	1	1	1			
27	67C–81971–00	.WIRE, LEAD .FIL	1	1	1			

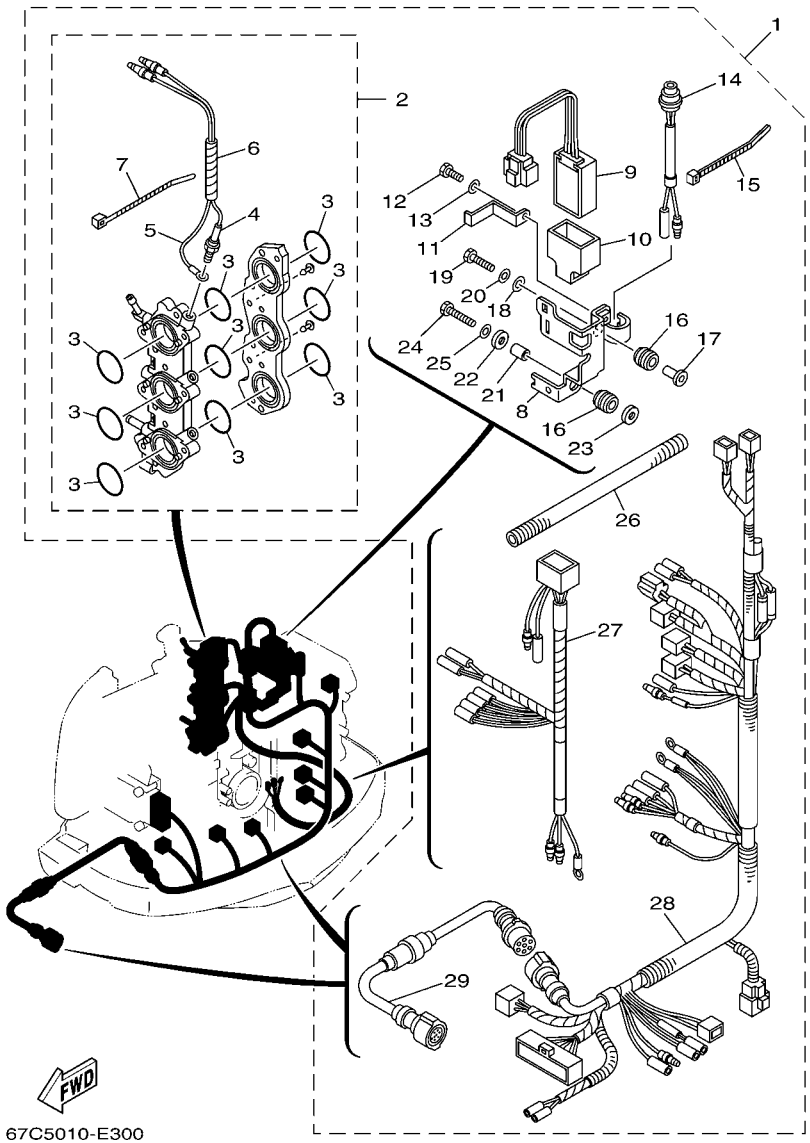

FIG. 33 OPTIONAL PARTS PIECES OPTIONNELLES

REF. NO.	PART NO. N° PIECES	DESCRIPTION DESCRIPTION	MHD	ED	ET			REMARKS REMARQUES
28	67C–82590–A0	.WIRE HARNESS ASSY .FAISCEAU DE FILS COMPLET	1	1	1			
29	67C–8258A–00	.EXTENSION, WIRE HARNESS .EXTENSION, FAISCEAU DE FILS	1	1	1			

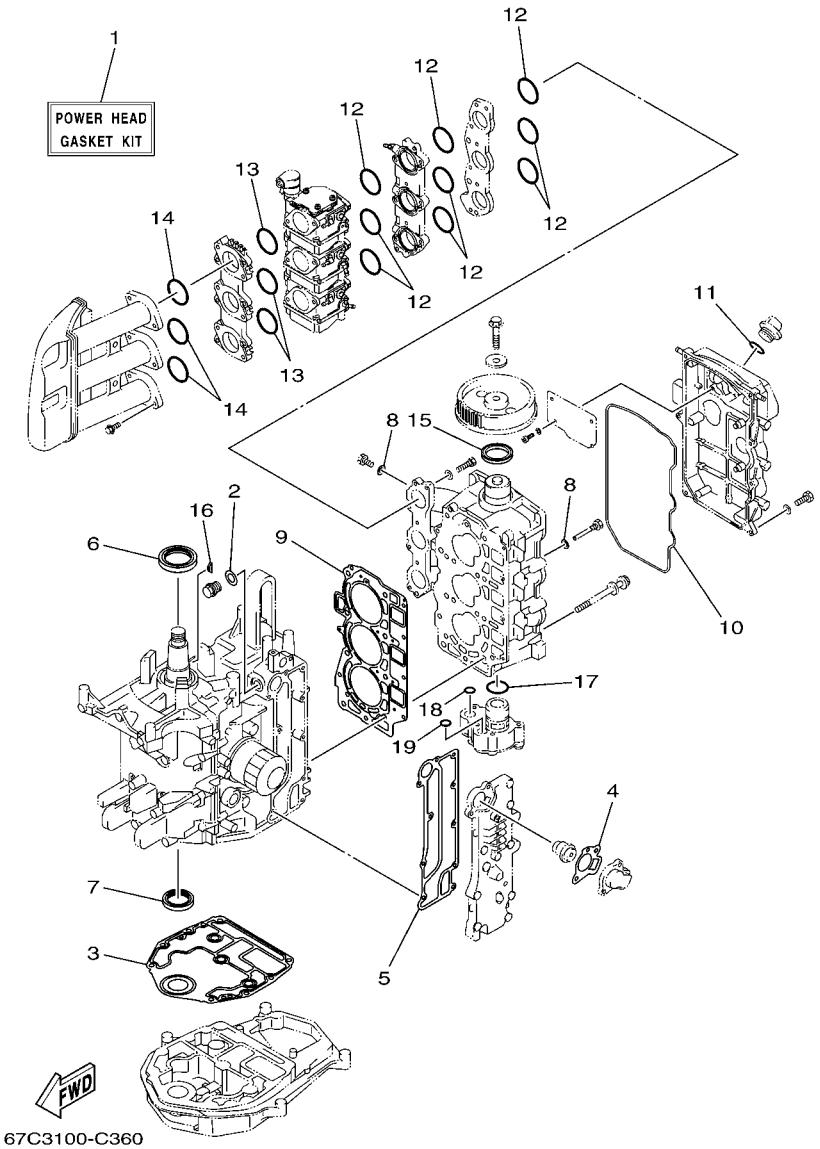

FIG. 34 REPAIR KIT 1 — KITS DE REPARATION 1

REF. NO.	PART NO. N° PIECES	DESCRIPTION DESCRIPTION	MHD	ED	ET			REMARKS REMARQUES
1	67C–W0001–01	POWER HEAD GASKET KIT POCHETTE DE JINTS TETE MOTRICE	1	1	1			
2	90430–14115	.GASKET .JOINT	1	1	1			
3	67C–11351–01	.GASKET, CYLINDER .JOINT, D'EMBASE	1	1	1			
4	62Y–12414–00	.GASKET, COVER .JOINT, COUVERCLE	1	1	1			
5	67C–41114–10	.GASKET, EXHAUST OUTER COVER .JOINT, COUVERCLE D'ECHAPPEMENT	1	1	1			
6	93102–43M42	.OIL SEAL .JOINT SPY	1	1	1			
7	93102–35M47	.OIL SEAL .JOINT SPY	1	1	1			
8	90430–06014	.GASKET .JOINT	4	4	4			
9	67C–11181–01	.GASKET, CYLINDER HEAD 1 .JOINT, DE CULASSE 1	1	1	1			
10	67C–11356–00	.SEAL, CYLINDER 2 .JOINT, SPY CYLINDRE	1	1	1			
11	93210–24M79	.O-RING .JOINT TORIQUE	2	2	2			
12	67C–14561–00	.O-RING .JOINT TORIQUE	9	9	9			
13	67C–14562–00	.O-RING .JOINT TORIQUE	3	3	3			
14	93210–34MJ6	.O-RING .JOINT TORIQUE	3	3	3			
15	93102–37M40	.OIL SEAL .JOINT SPY	1	1	1			
16	90280–04M06	.KEY, WOODRUFF .CLAVETTE, DEMI-LUNE	1	1	1			
17	93210–33MH2	.O-RING .JOINT TORIQUE	1	1	1			
18	93210–12MG9	.O-RING .JOINT TORIQUE	1	1	1			
19	93210–14515	.O-RING .JOINT TORIQUE	1	1	1			

FIG. 35 REPAIR KIT 2 — KITS DE REPARATION 2

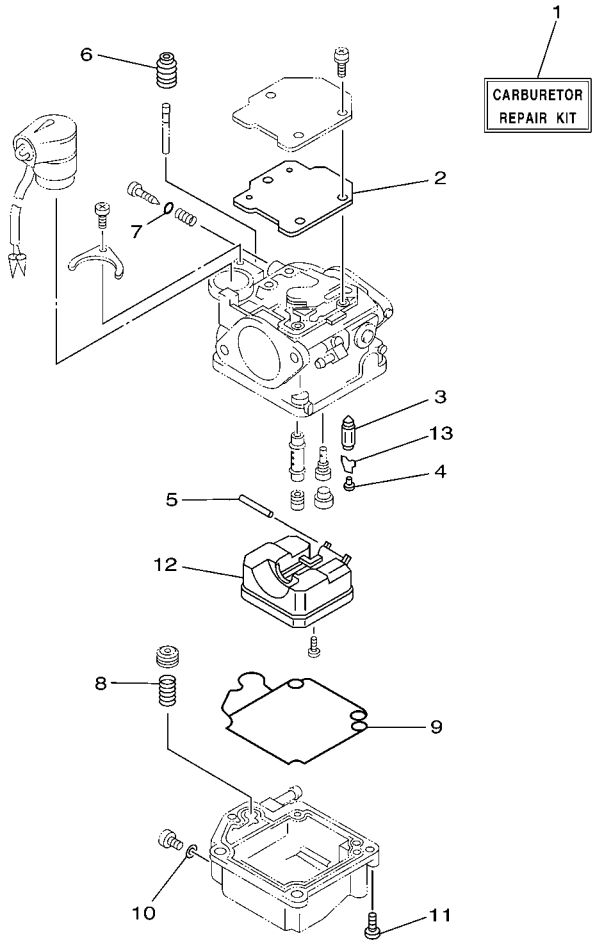

67C5100-E360

REF. NO.	PART NO. N° PIECES	DESCRIPTION DESCRIPTION	MHD	ED	ET			REMARKS REMARQUES
1	65W–W0093–02	CARBURETOR REPAIR KIT KIT DE REPARATION CARBURATEUR	1	1	1			
2	65W–14126–10	.GASKET .JOINT	1	1	1			
3	6G1–14546–01	.VALVE, NEEDLE .POINTEAU	1	1	1			
4	676–14186–00	.PIN, FLOAT .AXE, FLOTTEUR	1	1	1			
5	6H4–14548–00	.PIN, FLOAT ARM .AXE, BRAS DE FLOTTEUR	1	1	1			
6	65W–14373–01	.COVER, PLUNGER CAP .COUVERCLE DE PLONGEUR	1	1	1			
7	67C–14397–00	.O-RING .JOINT TORIQUE	1	1	1			
8	65W–14335–00	.SPRING, PLUNGER .RESSORT, PLONGEUR	1	1	1			
9	65W–14384–00	.GASKET, FLOAT CHAMBER .JOINT, CUVE DE FLOTTEUR	1	1	1			
10	65W–14398–00	.GASKET .JOINT	1	1	1			
11	97980–04114	.SCREW, WITH WASHER .VIS, AVEC RONDELLE	4	4	4			
12	63V–14985–00	.FLOAT .FLOTTEUR	1	1	1			
13	663–14159–00	.CLIP .JONC	1	1	1			

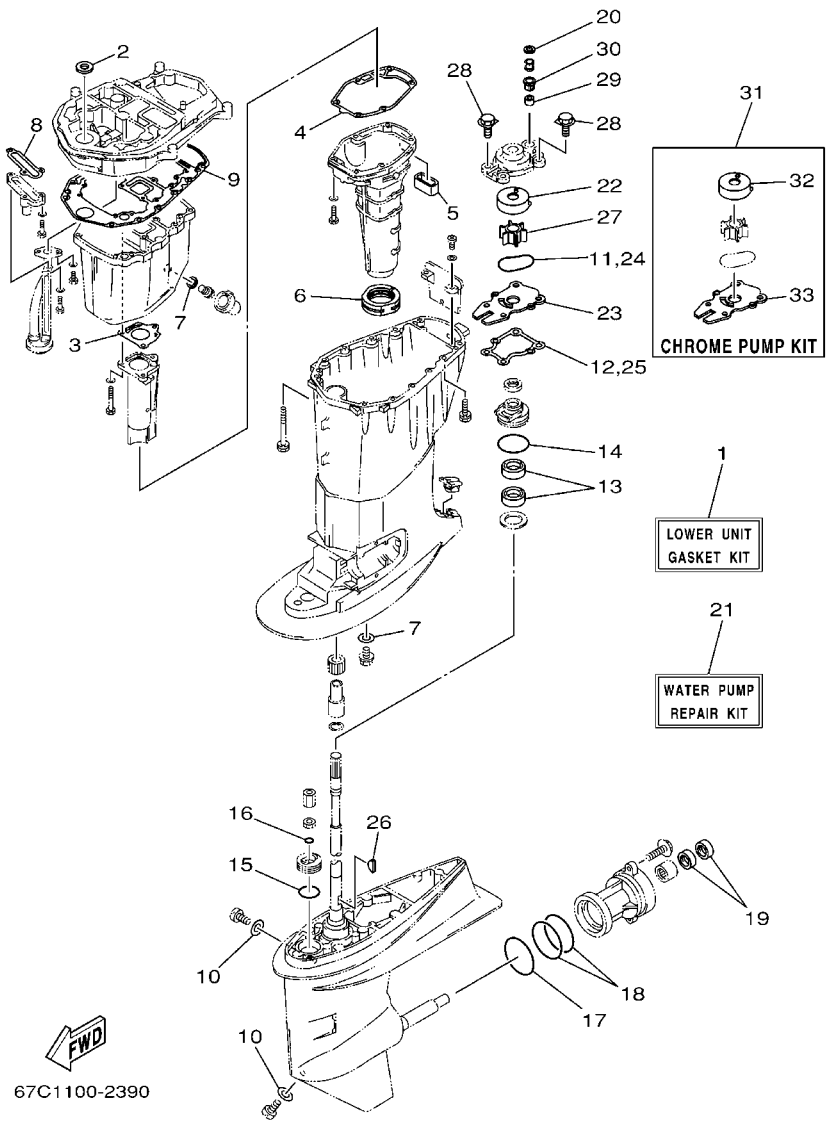

FIG. 36 REPAIR KIT 3 — KITS DE PEPARATION 3

REF. NO.	PART NO. N° PIECES	DESCRIPTION DESCRIPTION	MHD	ED	ET			REMARKS REMARQUES
1	67C–W0001–22	LOWER UNIT GASKET KIT POCHETTE DE JOINTS EMBASE	1	1	1			
2	93110–16004	.OIL SEAL .JOINT SPY	1	1	1			
3	67C–41133–00	.GASKET, EXHAUST MANIFOLD 1 .JOINT, PIPE D'ECHAPPEMENT	1	1	1			
4	62Y–41134–01	.GASKET, EXHAUST MANIFOLD .JOINT, PIPE D'ECHAPPEMENT	1	1	1			
5	62Y–45127–00	.SEAL .JOINT	1	1	1			
6	67C–45123–00	.GASKET, MUFFLER .JOINT, POT DE DETENTE	1	1	1			
7	90430–14M09	.GASKET .JOINT	2	2	2			
8	62Y–13475–00	.GASKET .JOINT	1	1	1			
9	69W–15312–00	.GASKET, OIL PAN .JOINT DE VENTILATEUR D'HUILE	1	1	1			
10	90430–08020	.GASKET .JOINT	2	2	2			
11	93210–59MG7	.O-RING .JOINT TORIQUE	1	1	1			
12	63D–44316–00	.GASKET, WATER PUMP .JOINT, POMPE A EAU	1	1	1			
13	93101–22M60	.OIL SEAL .JOINT SPY	2	2	2			
14	93210–48MG8	.O-RING .JOINT TORIQUE	1	1	1			
15	93210–33MG4	.O-RING .JOINT TORIQUE	1	1	1			
16	93210–06ME6	.O-RING .JOINT TORIQUE	1	1	1			
17	93210–69MG6	.O-RING .JOINT TORIQUE	1	1	1			
18	93210–74MG5	.O-RING .JOINT TORIQUE	2	2	2			
19	93101–22M00	.OIL SEAL .JOINT SPY	2	2	2			
20	90430–12072	.GASKET .JOINT	1	1	1			
21	66T–W0078–00	WATER PUMP REPAIR KIT KIT DE REPARATION DE LA POMPE	1	1	1			
22	63D–44322–00	.INSERT, CARTRIDGE .CUVETTE	1	1	1			
23	66T–44323–00	.OUTER PLATE, CARTRIDGE .PLAQUE EXTERIEURE	1	1	1			
24	93210–59MG7	.O-RING .JOINT TORIQUE	1	1	1			
25	63D–44316–00	.GASKET, WATER PUMP .JOINT, POMPE A EAU	1	1	1			
26	90280–03M03	.KEY, WOODRUFF .CLAVETTE, DEMI-LUNE	1	1	1			
27	6H4–44352–02	.IMPELLER .TURBINE	1	1	1			

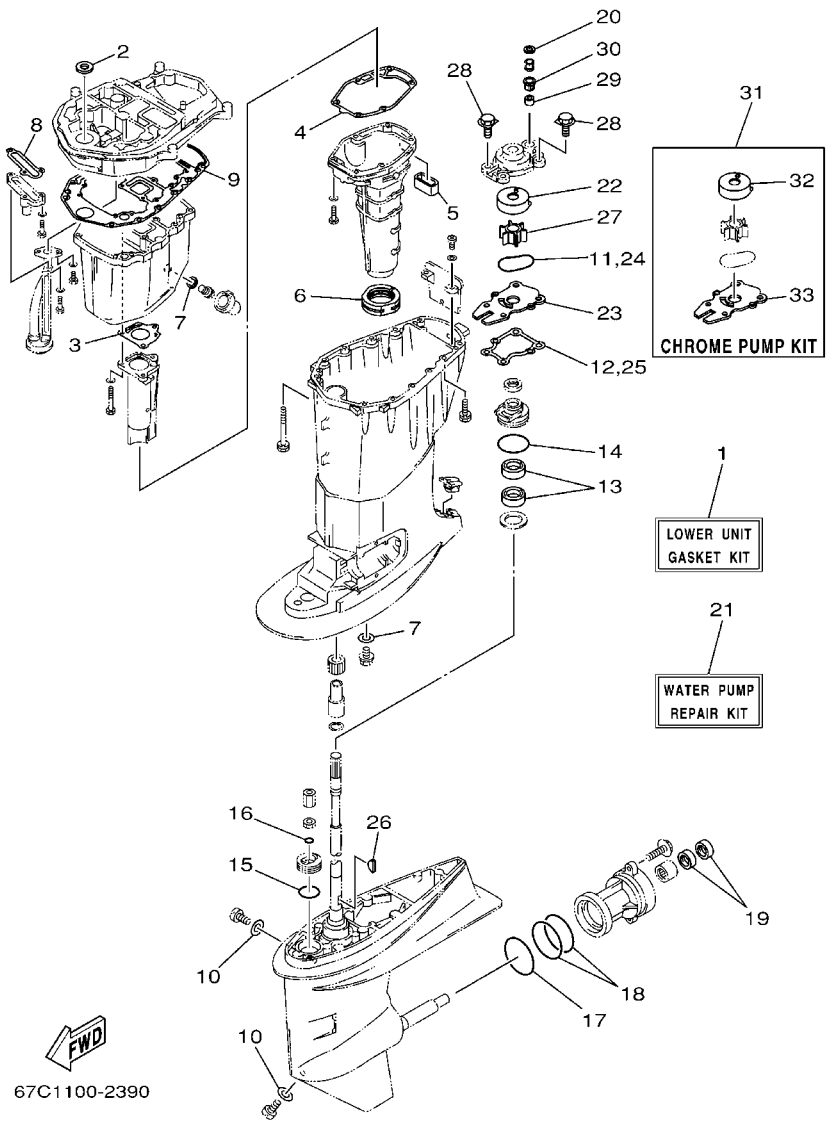

FIG. 36 REPAIR KIT 3 — KITS DE PEPARATION 3

REF. NO.	PART NO. N° PIECES	DESCRIPTION DESCRIPTION	MHD	ED	ET			REMARKS REMARQUES
28	90119–08M15	.BOLT, WITH WASHER .BOULON, AVEC RONDELLE	4	4	4			
29	663–44366–00	.DAMPER, WATER SEAL .JOINT, TUBE D'EAU	1	1	1			
30	63D–44312–00	.COVER, WATER PUMP HOUSING .COUVERCLE	1	1	1			
31	66T–W0078–0A	CHROME PUMP KIT KIT DE POMPE A EAU CHROMEE	1	1	1			
32	63D–44322–40	.INSERT, CARTRIDGE .CUVETTE	1	1	1			
33	66T–44323–40	.OUTER PLATE, CARTRIDGE .PLAQUE EXTERIEURE	1	1	1			

NUMERICAL INDEX
INDEX NUMERIQUE

PART NO. N° PIECES	REF. NO.
67C–11111–20–1S	4 – 2
67C–11111–30–1S	4 – 2
65W–11119–00	2 – 10
62Y–11133–30	4 – 3
67C–11168–00	4 – 24
67C–11181–01	4 – 15
	34 – 9
67C–11191–00–1S	4 – 19
62Y–11325–00	4 – 5
	24 – 25
66M–11327–00–94	4 – 7
	24 – 27
66M–11328–00	4 – 6
	24 – 26
67C–11351–01	2 – 9
	34 – 3
67C–11356–00	4 – 21
	34 – 10
62Y–11372–01	2 – 25
67C–11411–00	3 – 3
62Y–11416–00	3 – 4
62Y–11416–10	3 – 4
62Y–11416–20	3 – 4
65W–11476–00	8 – 9
65W–11536–10	8 – 8
67C–11537–01	8 – 3
65W–11545–00	11 – 5
62Y–11575–00	25 – 2
67C–11603–00	3 – 9
67C–11604–00	3 – 9
67C–11605–00	3 – 9
65W–11631–00–96	3 – 8
62Y–11633–00	3 – 10
65W–11635–00	3 – 8
65W–11636–00	3 – 8
62Y–11650–10	3 – 5
62Y–11654–00	3 – 6
62Y–11656–00	3 – 7
62Y–11656–10	3 – 7
62Y–11656–20	3 – 7
67C–12111–00	5 – 1
67C–12113–00	5 – 15
51Y–12114–00	5 – 4
62Y–12116–00	5 – 3
30X–12117–00	5 – 5
30X–12118–00	5 – 6
51Y–12119–00	5 – 7
62Y–12121–00	5 – 2

PART NO. N° PIECES	REF. NO.
62Y–12138–60	4 – 33
67C–12146–00	5 – 8
65W–12151–00	5 – 9
62Y–12158–00	5 – 11
62Y–12159–00	5 – 10
67C–12170–12	8 – 2
67C–12171–00	8 – 2
62Y–12216–00	5 – 14
62Y–12231–00	5 – 17
62Y–12238–00	5 – 12
64J–12238–00	5 – 12
62Y–12279–00	5 – 13
64J–12279–00	5 – 13
6G8–12411–03	2 – 12
688–12412–00	2 – 13
6H3–12413–00–1S	2 – 14
62Y–12414–00	2 – 15
	34 – 4
66M–12535–00	4 – 8
	24 – 28
69W–12535–00	16 – 40
68T–12572–00	16 – 39
6R3–12580–00	16 – 45
62Y–13131–01	9 – 5
69W–13300–00	8 – 11
62Y–13411–00	25 – 6
67F–13434–10	1 – 16
62Y–13437–62	10 – 42
	11 – 15
5GH–13440–00	2 – 26
62Y–13475–00	25 – 3
	36 – 8
67C–13589–00	6 – 4
67C–13589–10	33 – 2
67C–13971–00	6 – 11
67C–13972–00	6 – 12
67C–13973–00	6 – 13
67C–13974–00	6 – 14
	7 – 40
67C–13975–00	6 – 15
67C–13976–00	6 – 16
65W–14126–10	7 – 5
	35 – 2
6X4–14137–00	17 – 26
663–14159–00	7 – 16
	35 – 13
676–14186–00	7 – 15
	35 – 4

PART NO. N° PIECES	REF. NO.
67C–14242–00	7 – 46
67C–14243–01–94	6 – 8
67C–14245–00	7 – 45
67C–14255–00	6 – 18
67C–14271–00	6 – 5
67C–14291–00	33 – 8
69W–14292–00	33 – 11
67C–14318–00	6 – 17
67C–14325–00	7 – 44
65W–14335–00	7 – 21
	35 – 8
65W–14346–00	7 – 34
67C–14356–00	7 – 42
67C–14369–00	7 – 37
67C–14371–00	7 – 22
65W–14373–01	7 – 19
	35 – 6
67C–14379–00	7 – 20
67C–14379–10	7 – 20
67C–14380–00	7 – 35
65W–14384–00	7 – 23
	35 – 9
67C–14397–00	7 – 30
	35 – 7
65W–14398–00	7 – 26
	35 – 10
67C–14398–00	7 – 43
67C–14440–00	6 – 24
62Y–14485–00	4 – 20
63V–14523–00	7 – 10
6G1–14546–01	7 – 14
	35 – 3
6H4–14548–00	7 – 18
	35 – 5
67C–14555–00	7 – 31
67C–14561–00	6 – 7
	33 – 3
	34 – 12
67C–14562–00	6 – 10
	34 – 13
67C–14567–00	7 – 36
65W–14572–00	7 – 4
67C–14585–00	6 – 3
67C–14711–01–5B	24 – 7
67C–14711–12–5B	24 – 7
69H–14901–02	7 – 1
67C–14901–03	7 – 1
69H–14901–22	7 – 1

PART NO. N° PIECES	REF. NO.
67C–14901–23	7 – 1
69H–14902–02	7 – 2
67C–14902–03	7 – 2
69H–14902–22	7 – 2
67C–14902–23	7 – 2
69H–14903–02	7 – 3
67C–14903–03	7 – 3
69H–14903–22	7 – 3
67C–14903–23	7 – 3
67C–14923–00	7 – 29
67C–14923–20	7 – 29
69H–14943–22	7 – 12
67C–14943–25	7 – 12
67C–14947–00	7 – 11
69H–14947–00	7 – 11
67C–14948–00	7 – 7
67C–14948–01	7 – 11
67C–14948–02	7 – 7
679–14966–00	7 – 8
67C–14974–00	7 – 41
67C–14980–00	7 – 24
69H–14980–00	7 – 24
67C–14981–00	7 – 25
69H–14981–00	7 – 25
67C–14982–00	7 – 32
69H–14982–00	7 – 32
63V–14985–00	7 – 13
	35 – 12
65W–14992–00	7 – 27
67C–14992–00	7 – 33
67C–15100–01–1S	2 – 2
62Y–15311–02–5B	25 – 10
69W–15312–00	25 – 11
	36 – 9
67C–15316–00	25 – 13
67C–15316–10	25 – 13
67C–15362–00	25 – 1
6G8–15363–00	4 – 31
67C–15373–00	6 – 31
66T–15705–00	10 – 7
67C–15710–00	10 – 1
67C–15711–00	10 – 2
66T–15713–00	10 – 5
66T–15714–00	10 – 3
66T–15716–00	10 – 6
67C–15723–00	10 – 29
66T–15731–00	10 – 39
66T–15734–00	10 – 14

PART NO. N° PIECES	REF. NO.
63V–15741–00	10 – 4
63V–15744–00	10 – 10
6F5–15752–00	10 – 16
6F5–15753–00	10 – 17
689–15755–01	10 – 26
67C–15758–00	10 – 21
67C–15762–00	10 – 22
66T–15767–00	10 – 8
63V–15768–00	10 – 11
67C–15770–00	10 – 38
66M–15774–00	10 – 36
6F5–15779–02	10 – 27
66T–15784–00	10 – 9
6A0–15789–00	10 – 28
6F5–15791–00	10 – 15
66T–15794–00	10 – 13
6G8–2415E–00	16 – 54
6YK–24201–03	28 – 1
6YK–24201–10	28 – 1
65W–24251–10	9 – 20
6YK–24260–01	28 – 5
6YL–24268–01	28 – 2
6G1–24304–02	9 – 24
6YL–24306–54	28 – 8
67C–24312–00	16 – 43
61N–24329–00	16 – 28
6YL–24329–00	28 – 7
62Y–24374–01	9 – 10
688–24378–00	2 – 17
62Y–24410–04	9 – 1
62Y–24411–02	9 – 3
62Y–24415–01	9 – 2
62Y–24423–00	9 – 4
62Y–24444–01	9 – 7
62Y–24454–00	9 – 6
6C5–24471–00	9 – 8
65W–24474–00	9 – 12
6YK–24610–01	28 – 3
6YK–24610–10	28 – 3
6YL–24641–00	28 – 4
69W–26301–00	17 – 39
6X4–26367–00	17 – 34
	17 – 41
62Y–28100–00	9 – 27
67F–2812A–00	13 – 21
67C–28199–7A–D0	9 – 28
67C–28199–7A–E0	9 – 28
67C–28199–7A–F0	9 – 28

PART NO. N° PIECES	REF. NO.
67C–28199–7A–G0	9 – 28
67C–28199–7A–H0	9 – 28
67C–28199–7A–S0	9 – 28
67C–28199–8C–K0	9 – 29
67C–28199–8C–L0	9 – 29
67C–28199–8C–M0	9 – 29
67C–28199–8C–N0	9 – 29
67C–28199–8C–P0	9 – 29
67C–28199–8C–R0	9 – 29
67C–41113–01–1S	2 – 24
67C–41114–10	2 – 22
	34 – 5
67C–41131–00–5B	24 – 3
67C–41133–00	24 – 4
	36 – 3
62Y–41134–01	24 – 10
	36 – 4
67C–41137–12–94	24 – 1
67C–41212–00	19 – 22
67C–41213–20	19 – 28
6E9–41237–00	19 – 20
6F5–41237–00	19 – 21
67C–41241–00	19 – 19
6X4–41291–00	17 – 8
6F5–41662–00	19 – 4
6X4–42101–F2–4D	17 – 1
6X4–42111–01–4D	17 – 2
6X4–42115–00	17 – 22
6X4–42119–00	17 – 5
63D–42121–22–4D	17 – 55
63D–42126–00	17 – 17
6X4–42128–00	17 – 13
6X4–42131–01	17 – 51
6X4–42137–00	17 – 7
6X4–42159–00	17 – 45
62Y–42171–00	19 – 26
6X4–42177–00	17 – 6
67C–42510–01–4D	22 – 24
67C–42510–11–4D	22 – 24
6J8–42528–00	22 – 1
67C–42610–20–4D	1 – 1
69H–42610–20–4D	1 – 1
67C–42610–30–4D	1 – 1
69H–42610–30–4D	1 – 1
67C–42613–00–4D	1 – 2
67C–42613–10–4D	1 – 2
67C–42615–00	1 – 14
61N–42628–00	1 – 15

PART NO. N° PIECES	REF. NO.
62Y–42651–00	1 – 4
67C–42652–02	1 – 6
67C–42677–00	1 – 9
69H–42677–10	1 – 9
67C–42678–00	1 – 10
69H–42678–10	1 – 10
67C–42681–10	1 – 12
67C–42682–10	1 – 13
67C–42710–02–4D	16 – 1
67C–42710–12–4D	16 – 1
62Y–42716–00	16 – 5
65W–42717–00	16 – 6
65W–42724–10	16 – 22
62Y–42725–00	16 – 8
67C–42725–00	16 – 8
6X4–42725–10	17 – 54
62Y–42725–30	16 – 8
676–42726–00	18 – 1
6H4–42726–00	16 – 24
6H1–42726–21	16 – 22
62Y–42727–00	16 – 9
676–42727–00	16 – 26
6H3–42727–00	16 – 27
6X4–42728–00	18 – 5
6X4–42728–10	17 – 64
67C–42738–00–4D	16 – 7
67C–42741–00–4D	16 – 29
67C–42741–10–4D	16 – 29
6AH–42794–40	16 – 52
6AH–42794–50	16 – 53
67C–42815–00–4D	16 – 11
67C–42816–01	16 – 16
67C–43107–00–4D	20 – 15
67C–43107–10–4D	20 – 15
67C–43111–10–4D	20 – 1
	21 – 1
67C–43112–10–4D	20 – 2
	21 – 2
6K9–43131–01	20 – 9
	21 – 13
6K9–43139–01	22 – 7
66T–43144–00	16 – 18
6E5–43145–01	29 – 9
6G5–43145–01	20 – 13
	21 – 17
65W–43191–00	20 – 4
	21 – 4
65W–43192–00	20 – 3

PART NO. N° PIECES	REF. NO.
65W–43192–00	21 – 3
67C–43311–00–4D	20 – 7
	21 – 10
67C–43311–10–4D	20 – 7
	21 – 10
682–43318–01	20 – 17
689–43373–01	22 – 2
67C–43631–00	20 – 16
63D–43691–00	20 – 19
67C–43800–01–4D	23 – 1
6T4–43802–03	23 – 31
CS2–43803–81	23 – 50
65W–43804–01	23 – 3
65W–43805–01	23 – 5
65W–4380F–01	23 – 13
65W–4380K–00	23 – 17
67C–4380L–00	23 – 28
67C–43810–00	23 – 18
65W–43812–00	23 – 19
6H1–43816–00	23 – 26
65W–43817–00	23 – 41
65W–4381B–00	23 – 23
6H1–43829–00	23 – 65
65W–4382A–00	23 – 49
65W–43830–00	23 – 38
65W–43831–00	23 – 37
67C–43840–00	23 – 16
62X–43841–00	23 – 35
65W–43843–00	23 – 58
67F–43843–00	23 – 53
6H1–43844–10	23 – 56
	23 – 60
6H1–43845–00	23 – 45
6H1–43847–00	23 – 47
6H1–4384F–10	23 – 61
6H1–4384G–11	23 – 51
67C–43851–00	23 – 52
65W–43853–00	23 – 64
6T4–43853–00	23 – 39
65W–43854–00	23 – 48
6H1–43856–10	23 – 55
	23 – 59
6H1–43861–10	23 – 21
	23 – 24
65W–43865–00	23 – 20
6H1–43866–00	23 – 32
65W–4386A–00	23 – 62
65W–4386K–01	23 – 11

PART NO. N° PIECES	REF. NO.
65W–4386L–00	23 – 12
65W–43871–00	23 – 22
6H1–43875–00	23 – 44
62X–43878–00	23 – 66
65W–43879–01	23 – 14
65W–4387G–00	23 – 6
67C–43880–01	23 – 2
67C–43881–01	23 – 7
65W–43882–01	23 – 15
65W–43887–01	23 – 4
65W–43888–00	23 – 29
65W–43891–01	23 – 10
65W–43892–01	23 – 9
6X4–44100–10	17 – 21
6X4–44102–00	17 – 23
67C–44116–00	19 – 6
67C–44117–00	19 – 31
67C–44121–00	19 – 1
66M–44122–00	19 – 2
67C–44125–00	19 – 12
6X4–44132–00	17 – 25
6X4–44139–00	17 – 9
65W–44142–00	19 – 10
67C–44143–00	19 – 8
67C–44143–10	19 – 8
67C–44146–00	26 – 31
67C–44150–10	26 – 30
6X4–44159–00–4D	17 – 46
6X4–44173–00	17 – 47
6X4–44177–00	17 – 12
6X4–44188–00	17 – 15
6G8–44191–00	17 – 49
67C–44192–00	19 – 13
66T–44311–00	26 – 16
63D–44312–00	27 – 19
	36 – 30
63D–44316–00	26 – 20
	36 – 12
	36 – 25
63D–44322–00	26 – 17
	36 – 22
63D–44322–40	36 – 32
66T–44323–00	26 – 18
	36 – 23
66T–44323–40	36 – 33
63D–44341–00	26 – 23
6H4–44352–02	26 – 22
	36 – 27

PART NO. N° PIECES	REF. NO.
62Y–44361–00	27 – 1
67C–44361–00	27 – 1
663–44366–00	27 – 18
	36 – 29
663–44367–00	27 – 2
6H3–44391–01	16 – 21
67C–44514–00–4D	22 – 25
67C–44514–10–4D	22 – 25
66T–44526–30	22 – 27
67C–44551–01–4D	22 – 31
67C–44551–10–4D	22 – 31
67C–44552–01–4D	22 – 36
67C–44553–00–4D	22 – 33
67C–44555–11–94	22 – 39
67C–44555–21–94	22 – 39
67C–44575–00	22 – 32
67C–45111–00–4D	24 – 13
67C–45111–21–4D	24 – 13
67C–45123–00	24 – 12
	36 – 6
62Y–45127–00	24 – 11
	36 – 5
67C–45151–00	24 – 16
63D–45155–00	24 – 19
6C5–45155–00	24 – 19
63D–45214–00	26 – 7
63D–45215–00	26 – 8
65W–45251–00	20 – 35
	21 – 33
663–45251–00	20 – 20
67C–45251–00	27 – 15
67C–45300–01–4D	26 – 1
67C–45300–11–4D	26 – 1
67C–45301–00–4D	26 – 2
679–45318–00	24 – 20
66T–45321–00	26 – 33
688–45341–10	26 – 6
66T–45344–01	26 – 25
63D–45361–02–4D	26 – 48
67C–45371–00	27 – 7
63D–45375–00	27 – 6
663–45376–00–94	27 – 5
6E5–45378–00	26 – 13
67C–45501–00	26 – 37
67C–45501–10	26 – 37
6H4–45536–00	26 – 3
66T–45551–00	26 – 40
66T–45560–01	26 – 42

PART NO. N° PIECES	REF. NO.
663–45567–01	26 – 44
663–45567–10	26 – 44
663–45567–20	26 – 44
663–45567–30	26 – 44
663–45567–40	26 – 44
663–45567–50	26 – 44
663–45567–60	26 – 44
66T–45571–00	26 – 45
63D–45577–00	26 – 47
63D–45577–10	26 – 47
63D–45577–20	26 – 47
63D–45577–30	26 – 47
63D–45577–40	26 – 47
63D–45577–50	26 – 47
63D–45577–60	26 – 47
663–45587–01	26 – 39
663–45587–10	26 – 39
663–45587–20	26 – 39
663–45587–30	26 – 39
663–45587–40	26 – 39
663–45587–50	26 – 39
663–45587–60	26 – 39
66T–45611–00	26 – 60
66T–45631–00	26 – 55
67C–45633–00	26 – 58
66T–45635–00	26 – 59
663–45930–00–98	27 – 25
663–45941–01–EL	27 – 25
6H5–45943–00–EL	27 – 25
69W–45945–00–EL	27 – 25
6H5–45945–00–EL	27 – 25
69W–45947–00–EL	27 – 25
663–45949–01–EL	27 – 25
69W–45952–00–EL	27 – 25
6H5–45952–00–EL	27 – 25
663–45952–02–EL	27 – 25
663–45956–01–EL	27 – 25
6H5–45958–00–EL	27 – 25
663–45958–01–EL	27 – 25
697–45970–00–98	27 – 25
663–45970–60–98	27 – 25
663–45972–60–98	27 – 25
663–45974–02–98	27 – 25
663–45974–60–98	27 – 25
663–45976–00–98	27 – 25
663–45978–00–98	27 – 25
663–45987–02	27 – 20
66T–45997–00	27 – 21

PART NO. N° PIECES	REF. NO.
65W–46241–00	8 – 7
67C–46297–00	10 – 32
6X4–47731–00	17 – 24
703–48152–00	31 – 57
703–48153–00	31 – 3
6X4–48154–00	17 – 18
703–48189–00	31 – 17
703–48198–00	31 – 14
703–48207–17	30 – 1
	31 – 1
703–48211–01	31 – 61
703–48212–00	31 – 58
703–48213–00	31 – 59
703–48215–00	31 – 43
6X4–48215–10	17 – 4
703–48219–00	31 – 30
703–48221–00	31 – 56
703–48222–00	31 – 27
703–48223–00	31 – 28
703–48225–00	31 – 29
703–48226–00	31 – 26
703–48227–00	31 – 24
703–48232–00	31 – 62
703–48234–00	31 – 18
703–48235–00	31 – 4
703–48236–00	31 – 16
703–48238–00	31 – 22
703–48243–00	31 – 15
703–48244–00	31 – 21
703–48245–00	31 – 11
703–48246–00	31 – 23
701–48248–00	31 – 13
703–48252–00	31 – 12
6X4–48261–00	17 – 27
703–48261–01	31 – 2
703–48264–00	31 – 6
703–48265–00	31 – 9
703–48268–00	31 – 5
703–48271–00	31 – 60
703–48281–00	31 – 31
703–48282–00	31 – 32
703–48284–10	31 – 52
701–48287–00	31 – 42
703–48291–10	31 – 39
703–48293–10	31 – 41
701–48310–90	30 – 2
701–48320–00	30 – 2
701–48320–20	30 – 2

NUMERICAL INDEX
INDEX NUMERIQUE

PART NO. N° PIECES	REF. NO.
701–48320–50	30 – 2
67C–48321–11	17 – 32
67C–48344–00	19 – 17
67C–48344–10	19 – 34
703–48345–01	31 – 19
703–48358–00	31 – 20
65W–48511–00	22 – 46
62Y–48538–00	19 – 36
63D–48538–00	17 – 37
	17 – 43
6X4–48538–00	17 – 33
6X4–48538–10	17 – 40
65W–61350–00	29 – 1
65W–61351–00	29 – 2
67C–81337–00	11 – 11
65W–81639–10	10 – 41
	11 – 14
67C–81800–02	15 – 1
65W–81801–00	15 – 8
65W–81807–00	15 – 5
65W–81820–00	15 – 7
67C–81826–00	15 – 2
65W–8182A–00	13 – 5
65W–8182B–00	13 – 10
	13 – 12
65W–8182S–00	15 – 10
65W–81830–00	15 – 4
65W–81840–00	15 – 9
67C–81850–01	15 – 6
65W–81857–03	15 – 3
65W–8191C–00	13 – 2
6H5–81920–00	14 – 15
65W–81922–00	13 – 3
67F–81930–00	33 – 9
65W–81941–00	13 – 1
6X4–81942–00	18 – 8
67C–81948–00	14 – 10
67C–81949–00	14 – 18
67C–81949–10	14 – 19
6H1–81950–00	14 – 6
65W–81960–10	12 – 16
67C–81971–00	33 – 27
6AH–81994–40	10 – 45
	11 – 18
6AH–81994–50	10 – 46
	11 – 19
6AH–81995–40	10 – 43
	11 – 16

PART NO. N° PIECES	REF. NO.
6AH–81995–50	10 – 44
	11 – 17
6AG–81996–00	11 – 20
67C–82105–00	13 – 11
65W–82117–00	13 – 8
6G5–82119–00	14 – 20
6G5–82119–10	13 – 9
65W–82127–00	13 – 37
67C–82127–00	22 – 18
6U0–82127–00	21 – 36
67C–82127–10	22 – 18
67C–82127–20	20 – 37
6H1–82148–00	21 – 25
1E6–82151–00	32 – 7
67F–82151–00	13 – 16
67F–8215B–00	13 – 17
65W–82181–00	23 – 8
6A0–82317–00	14 – 11
6G8–82370–30	12 – 11
62Y–82377–00	16 – 51
65W–82504–00	13 – 36
67C–82509–00	13 – 4
703–82510–43	31 – 44
67C–82519–00	13 – 31
65W–8252V–00	12 – 3
67C–8252V–00	12 – 7
703–82531–00	31 – 46
65W–82532–00	13 – 38
703–82540–00	31 – 50
682–82556–00	18 – 3
	31 – 48
67F–82560–00	33 – 14
63D–82563–10	14 – 1
703–82563–12	31 – 55
688–82575–01	31 – 47
6K5–82575–03	18 – 2
703–82577–00	31 – 45
689–8257Y–00	18 – 4
6E5–82587–00	14 – 2
6E5–82588–00	16 – 37
67C–8258A–00	33 – 29
688–8258A–20	31 – 49
67C–82590–00	13 – 15
67C–82590–10	13 – 15
67C–82590–50	13 – 15
67C–82590–A0	33 – 28
703–82591–00	31 – 53
703–82592–00	31 – 54

PART NO. N° PIECES	REF. NO.
67C–82594–00	13 – 29
703–82594–00	31 – 25
69W–83354–00	33 – 5
703–83383–02	31 – 51
6Y5–8350T–90	32 – 1
6Y5–83553–00	32 – 6
6E5–83558–00	22 – 21
6E5–83558–10	26 – 14
6Y5–8355X–T1	32 – 5
6H4–83589–00	16 – 48
62Y–83614–00	14 – 3
6Y5–83653–20	32 – 8
67H–83672–00	22 – 5
67C–83790–01	33 – 1
69W–83792–00	33 – 4
62Y–84301–00	16 – 47
67C–85415–00	16 – 46
65W–85510–00	11 – 2
65W–85510–10	11 – 2
67C–85540–01	12 – 1
67C–85542–00	12 – 4
69W–85546–00	33 – 10
65W–85547–00	12 – 5
65W–85550–01	11 – 1
65W–85550–11	11 – 1
67C–85554–00	12 – 8
67C–85570–00	12 – 9
65W–85580–00	11 – 3
67C–85790–00	13 – 39
65W–86129–00	12 – 2
65W–86129–10	12 – 6
67C–W0001–01	34 – 1
67C–W0001–22	36 – 1
67C–W0070–10	1 – 11
66T–W0078–00	36 – 21
66T–W0078–0A	36 – 31
65W–W0093–02	35 – 1
67C–W009A–13–1S	4 – 1
67C–W009B–02–1S	2 – 1
90101–06020	20 – 36
	21 – 34
90101–08M15	22 – 26
90101–09M01	29 – 7
90101–12014	17 – 56
90101–12M65	20 – 40
	21 – 39
90105–06M18	22 – 3
90105–08M61	26 – 54

PART NO. N° PIECES	REF. NO.
90105–08M87	2 – 11
90109–06M65	4 – 14
90109–06M80	16 – 34
	16 – 42
90109–06M81	16 – 10
	16 – 38
	19 – 5
90109–06M86	10 – 37
	14 – 4
	16 – 19
	19 – 7
90109–06MA1	10 – 33
90109–06MA2	16 – 50
90109–06MA4	1 – 7
90109–08M63	5 – 16
90109–12MA3	22 – 40
90110–10M02	20 – 32
	21 – 30
90116–10M28	22 – 9
90119–06025	8 – 15
90119–06M08	16 – 2
90119–06M82	6 – 26
90119–06M86	6 – 27
90119–06M91	19 – 33
90119–06MA3	4 – 18
90119–06MA5	2 – 23
90119–08M01	2 – 4
90119–08M15	26 – 29
	36 – 28
90119–08M39	15 – 11
90119–08M44	27 – 14
90119–08M79	24 – 14
90119–08M82	24 – 15
90119–09M00	4 – 17
90142–05001	17 – 10
90142–05M06	26 – 9
90157–05M16	28 – 6
90167–06002	16 – 41
90170–09M03	29 – 5
90170–12138	26 – 41
90170–20137	11 – 6
90171–16011	27 – 23
90179–06M24	1 – 3
90185–08045	22 – 28
90185–09M01	29 – 4
90185–10051	22 – 10
90185–10M13	20 – 33
	21 – 31

PART NO. N° PIECES	REF. NO.
90185–12M12	17 – 63
90185–22M11	20 – 12
	21 – 16
90201–05M06	19 – 14
90201–06M31	33 – 18
90201–08M00	20 – 24
	21 – 22
90201–08M05	33 – 22
90201–08M07	33 – 23
90201–10120	22 – 11
90201–10M06	8 – 5
90201–10M20	29 – 3
90201–10M63	29 – 8
90201–12035	17 – 60
90201–12426	20 – 42
	21 – 41
90201–12M07	16 – 15
90201–12M16	14 – 14
	22 – 42
90201–13M19	22 – 44
90201–21M18	11 – 7
90201–22429	26 – 46
90201–22M05	22 – 45
90201–27M00	26 – 27
90201–30M00	22 – 12
90202–12060	27 – 3
90202–21100	22 – 43
90206–12052	16 – 14
90206–12M22	17 – 58
90249–12M38	20 – 28
	21 – 26
90249–18M35	20 – 22
	21 – 20
90250–06023	26 – 57
90254–03M05	19 – 3
	19 – 11
90266–06M02	1 – 5
90280–03M03	26 – 21
	36 – 26
90280–04M06	8 – 10
	34 – 16
90338–04M17	6 – 6
90338–07004	16 – 23
90340–08002	26 – 4
90340–14M06	2 – 7
	24 – 23
	25 – 14
90380–08M05	33 – 21

PART NO. N° PIECES	REF. NO.
90381–12M10	20 – 29
	21 – 27
90381–12M11	20 – 30
	21 – 28
90386–08032	17 – 16
90386–12003	17 – 61
90386–12M37	16 – 12
90386–12MA2	16 – 13
90386–14MA1	20 – 6
	21 – 6
90386–18M44	20 – 25
	21 – 23
90386–18MA0	21 – 24
90386–18MA5	20 – 26
90386–22MA4	20 – 14
	21 – 18
90386–26MA3	17 – 50
90386–30M60	22 – 16
90386–30M77	22 – 14
90386–30M78	22 – 13
90387–06060	16 – 4
90387–06119	14 – 12
90387–06M29	19 – 23
90387–06M43	16 – 36
90387–06M60	33 – 17
90387–06M70	6 – 30
90387–06M87	16 – 49
90387–06M88	19 – 29
90387–06M89	10 – 25
90387–10M42	29 – 6
90387–12M02	17 – 59
90387–18M03	20 – 27
90387–23002	24 – 21
90389–22M01	27 – 22
90401–20M00	2 – 27
90430–06014	4 – 13
	4 – 28
	34 – 8
90430–08020	26 – 5
	36 – 10
90430–08143	4 – 29
90430–12072	27 – 4
	36 – 20
90430–14115	2 – 8
	34 – 2
90430–14M09	24 – 24
	25 – 15
	36 – 7

NUMERICAL INDEX
INDEX NUMERIQUE

PART NO. N° PIECES	REF. NO.
90445–07M53	22 – 20
90445–07ME8	26 – 12
90445–07MF1	22 – 20
90445–09068	2 – 16
90445–09095	2 – 18
90445–09104	2 – 19
90445–09M34	6 – 1
90445–10MG6	9 – 17
90445–10MH8	9 – 21
90446–06M90	33 – 6
90446–10M82	11 – 4
90446–10M86	10 – 40
90446–14M12	9 – 22
90446–14M58	33 – 26
90464–09M13	16 – 25
90464–09M42	17 – 35
90464–10M57	13 – 28
90465–05M87	13 – 22
90465–06M88	12 – 15
	14 – 5
90465–06M90	12 – 14
	13 – 23
90465–08M07	22 – 22
90465–08M63	13 – 18
	21 – 12
90465–08M75	13 – 25
	14 – 9
90465–10M77	21 – 7
90465–11M10	2 – 20
	6 – 2
	16 – 44
	22 – 4
	22 – 23
	26 – 15
	33 – 7
90465–13M11	21 – 19
90465–13M18	13 – 24
	33 – 15
90467–08004	2 – 21
90467–09M03	9 – 19
	9 – 23
90467–09M17	9 – 16
90467–10M04	9 – 15
	9 – 18
90467–15M14	6 – 32
90468–10005	17 – 38
	17 – 44
	19 – 15

PART NO. N° PIECES	REF. NO.
90468–18008	19 – 9
	19 – 16
	19 – 18
	19 – 35
90480–09M12	16 – 3
90480–10M16	10 – 34
90480–10M23	33 – 16
90480–12072	10 – 35
90480–13M24	16 – 35
90480–25161	12 – 10
90501–10326	7 – 9
90501–18M01	26 – 56
90501–23215	17 – 14
90506–18M40	16 – 20
90508–20M44	19 – 30
91318–04025	23 – 40
91380–05025	11 – 8
91380–05030	11 – 8
91490–06012	6 – 20
	7 – 39
91490–12010	19 – 27
91490–20010	17 – 11
	17 – 20
91490–30025	27 – 24
91690–30018	20 – 5
	21 – 5
92903–06600	2 – 6
	24 – 32
	25 – 5
	25 – 8
92907–04600	4 – 26
92990–04100	32 – 3
92990–04600	6 – 19
	7 – 38
92990–05600	24 – 18
92990–06100	16 – 32
92990–06600	16 – 33
	18 – 7
	26 – 36
92990–08600	31 – 34
92990–12200	17 – 57
92990–12600	17 – 62
92995–05600	4 – 10
	11 – 10
	24 – 30
92995–06600	4 – 12
	4 – 23
	6 – 23

PART NO. N° PIECES	REF. NO.
92995–06600	6 – 29
	9 – 14
	9 – 26
	10 – 20
	10 – 24
	10 – 31
	11 – 13
	12 – 13
	12 – 18
	12 – 18
	13 – 7
	13 – 14
	13 – 20
	13 – 27
	13 – 35
	14 – 8
	14 – 17
	17 – 31
	17 – 53
	18 – 10
	20 – 39
	21 – 9
	21 – 38
	24 – 6
	24 – 9
	25 – 17
	33 – 13
	33 – 20
92995–08100	20 – 11
	21 – 15
	22 – 30
	22 – 38
	27 – 9
	27 – 17
92995–08600	13 – 33
	17 – 29
	22 – 35
	33 – 25
92995–10100	27 – 12
92995–10600	20 – 34
	21 – 32
	27 – 13
92995–12200	20 – 41
	21 – 40
93101–22M00	26 – 53
	36 – 19
93101–22M60	26 – 24
	36 – 13

PART NO. N° PIECES	REF. NO.
93102–35M47	3 – 2
	34 – 7
93102–37M40	8 – 1
	34 – 15
93102–43M42	3 – 1
	34 – 6
93110–16004	24 – 2
	36 – 2
93210–04N50	23 – 42
93210–04N51	23 – 43
93210–064A5	23 – 27
93210–06ME6	26 – 35
	36 – 16
93210–09165	23 – 36
93210–10M74	23 – 33
	23 – 54
	23 – 67
93210–11073	23 – 57
93210–11368	23 – 25
93210–12MG9	8 – 13
	34 – 18
93210–12N52	23 – 34
93210–14515	8 – 14
	34 – 19
93210–16275	29 – 10
93210–18397	23 – 46
93210–24M79	4 – 32
	9 – 11
	34 – 11
93210–29M94	22 – 15
93210–33MG4	26 – 34
	36 – 15
93210–33MH2	8 – 12
	34 – 17
93210–34MJ6	6 – 25
	34 – 14
93210–48MG8	26 – 26
	36 – 14
93210–50768	23 – 30
93210–59MG7	26 – 19
	36 – 11
	36 – 24
93210–69MG6	26 – 50
	36 – 17
93210–74MG5	26 – 51
	36 – 18
93306–001U1	26 – 49
93315–32224	26 – 11

PART NO. N° PIECES	REF. NO.
93317–22204	26 – 52
93332–00001	26 – 38
93332–00003	26 – 43
93410–28M06	22 – 17
93420–36M01	24 – 22
93430–06024	31 – 10
93450–09M01	4 – 4
93450–17129	3 – 11
93501–08001	23 – 63
93604–08062	26 – 28
93605–14143	8 – 4
93606–12019	25 – 12
	27 – 10
93608–12M05	25 – 9
93608–16M16	6 – 21
93700–06M03	17 – 3
	20 – 8
	21 – 11
94701–00375	4 – 34
95380–04600	32 – 4
95380–05600	9 – 9
	26 – 10
	31 – 7
95380–06600	16 – 30
	17 – 19
	31 – 40
95380–06700	1 – 8
	26 – 32
95380–12600	20 – 43
	21 – 42
95380–12700	22 – 41
95780–06300	19 – 25
95895–06030	14 – 13
95895–10040	8 – 6
97013–06016	25 – 7
97013–06020	24 – 31
97013–06025	25 – 4
97013–06035	2 – 5
97075–06025	24 – 8
	25 – 16
97075–06050	24 – 5
97075–08030	22 – 29
	22 – 37
97075–10040	27 – 11
97080–08016	20 – 23
	21 – 21
97085–06010	21 – 35
97095–05012	4 – 9

PART NO. N° PIECES	REF. NO.
97095–05012	13 – 30
	24 – 29
97095–05016	11 – 9
97095–06010	4 – 27
	10 – 30
	20 – 18
97095–06012	12 – 17
	13 – 13
	13 – 19
	13 – 26
	13 – 34
	14 – 16
	16 – 17
	18 – 9
97095–06014	17 – 36
	17 – 42
	19 – 32
	20 – 38
	21 – 8
	21 – 37
97095–06016	33 – 12
97095–06020	4 – 11
	4 – 22
	6 – 28
	12 – 12
	14 – 7
97095–06025	6 – 22
	9 – 25
	10 – 19
	10 – 23
	11 – 12
	19 – 24
	33 – 19
97095–06030	9 – 13
	13 – 6
	17 – 30
97095–06040	12 – 17
97095–08012	13 – 32
97095–08014	4 – 30
97095–08020	20 – 10
	21 – 14
	22 – 34
97095–08025	27 – 8
97095–08030	33 – 24
97095–08035	27 – 16
97095–08040	17 – 28
97380–05025	31 – 8
97380–08030	31 – 33

PART NO. N° PIECES	REF. NO.
97523–06425	10 – 18
97595–06590	6 – 9
97780–60525	22 – 8
97780–60920	17 – 48
97803–04010	7 – 6
97880–05016	24 – 17
97880–06016	18 – 6
97880–06025	16 – 31
97885–06008	22 – 19
97885–06016	17 – 52
	22 – 6
97980–04114	7 – 28
	35 – 11
98507–04010	4 – 25
98580–03015	31 – 38
98580–04006	31 – 36
98580–04008	7 – 17
98580–04010	31 – 35
98580–05010	31 – 37
98680–06525	20 – 21
99080–10600	20 – 31
	21 – 29
99530–08012	2 – 3
	4 – 16
9E450–04533	32 – 2